Cantilever Arm Rack
Assembly Instructions

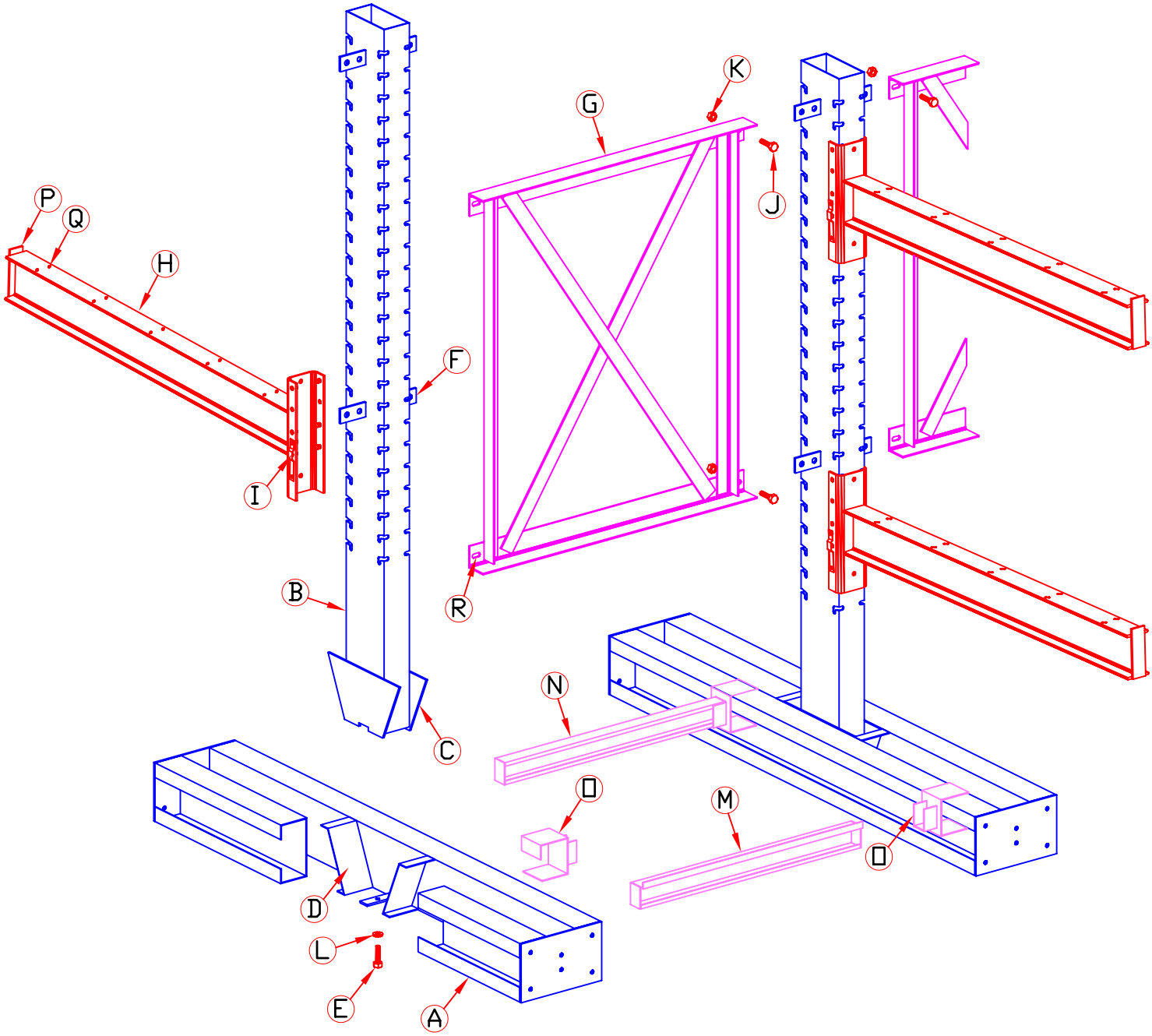

A - Upright Base
B - Upright Post
C - Wedge Plate
D - Base Pocket
E - $\frac{1}{2}$" x $2\frac{1}{4}$"L. Bolt
F - Horizontal Brace Tab
G - Horizontal Brace
H - Cantilever Arm
I - Automatic Arm Lock
J - $\frac{1}{2}$" x $1\frac{1}{2}$"L. Bolt
K - $\frac{1}{2}$" Nut
L - $\frac{1}{2}$" Washer
M - Facia Deck Support Beam
N - Internal Deck Support
O - Base Saddle
P - Arm Stop (Optional)
Q - Decking Mount Holes (Optional)
R - Mounting Slots

ENGINEERING DEPARTMENT

UNICOR METALS DIVISION
F.C.I. EL RENO, OKLAHOMA

CATPIEC500