Metal Products

www.unicor.gov

PAGE 35

PAGE 34

PAGE 47

PAGE 5

METAL PRODUCTS BASICS

PAGE 15

PAGE 10

PAGE 39

PAGE 50

PAGE 33

UNICOR

Industrial Products Business Group

CATC1204

HOW TO USE THIS CATALOG

Key to Graphic:

1. *The new Metals/BASICS Catalog is divided into four product line groups; Lockers & Cabinets, Tables/Work Benches, Steel Shelving, Industrial Racking, Food Service, and Additional Products.*
2. *The pages in each group are color coded and titled for clarity.*
3. *Opening pages have information specific to each product line group.*
4. *Interior pages of these sections are designed to make ordering simple. Charts contain ordering, shipping, and pricing information.*
5. *Colors available for any given product are represented on each page along with its 2-digit color code.*
6. *Color choices are made by the customer and the 2-digit color code must be added to the end of the stock number when ordering.*
7. *Other specific information, such as technical support, custom work, and load bearing capacity, can be found in the tinted color panels.*
8. *Web site and toll-free number to access additional information and pricing.*

Metals/BASICS catalog… supplying products to meet your needs.

It's easy to find products that work best for you, such as...

- Lockers for all personnel/staff needs
- Ready-to-assemble shelving in an outstanding range of dimensions and sizes, shipped with fasteners for easy assembly with hand tools.
- Workbenches and Café tables to fit every application.
- Racking for warehouse operations.
- Metal cabinets and lockers that are economical and durable.
- Depending on your project's complexity, design specialists can provide guidance over the phone, prepare sketches and estimates from a floor plan you provide, or even visit your site to develop a layout — for a nominal administrative charge.

The ultimate security: a full guarantee. UNICOR is committed to meeting your highest standards for performance. If at any time a product does not meet your expectations, UNICOR will promptly repair or replace it at no expense to you.

We invite you now to get to know UNICOR's quality metal products and the flexibility and versatility they offer. If you have any questions, please call UNICOR's Customer Service Center at 800 827-3168.

You are viewing the **Metals/BASICS** catalog.

FLIP THIS CATALOG OVER to view the **Metals/TECHNICAL** catalog.

Metals/TECHNICAL Catalog contents include:

- Shelving
- Industrial Pallet Racking
- Catwalk Systems and Mezzanines
- Industrial Cantilever Racks

CONTENTS

WE ARE COMMITTED TO YOUR TOTAL AND COMPLETE SATISFACTION.

UNICOR has been manufacturing top quality, durable metal products for more than 50 years. We are proud of our capabilities and are ready, willing, and able to put them to work for you.

We are convenient and easy to use. Since UNICOR is a government-established source, you need not waste valuable time with a prolonged procurement process. You can come directly to us. Additionally, you don't need a firm specification before you talk with us. We may even be able to suggest solutions to your needs. All you have to do is give us a call.

This catalog is not intended to be all- inclusive. Rather, it is designed to give you an idea of our diverse product line. If you don't see exactly what you need, contact us and we will gladly work with you to prototype a product to your exact specifications.

Your complete and absolute satisfaction is our top priority. We are committed to this goal. In fact, we are so sure you will be satisfied with our products and services that we offer the following "Escape-Proof" Guarantee.

We take great pride in teaching a good work ethic and marketable job skills. As a result, we produce high quality goods and services for our customers. We are committed to your complete and continual satisfaction. If, at any time, an item we have provided does not entirely meet your expectations, we will cheerfully and promptly repair or replace it, entirely at our expense.

Let us show you what we can do for you.

Metals/BASICS

How to Use This Catalog i
How to Order iv
Terms and Conditions v
Lockers & Cabinets 2
- Wardrobes and Cabinets 4
- Sports Lockers 8

Shelving 12
- Open Steel Shelving 14
- Closed Steel Shelving. 17
- Counter Shelving, Nut & Bolt 20
- Ledge Shelving, Nut & Bolt. 22
- Nut & Bolt Accessories. 26
- E-Z-Lock Shelving 28
- Special Purpose Shelving 31

Tables/Work Benches. 32
- Café Tables 32
- Tables. 34
- Work Benches 35

Industrial Stacking Racks 36
Food Service 38
- Prep Tables 38
- Miscellaneous 42

Additional Products 44
- Dormitory Beds and Accessories 44
- Segregation Units and Accessories. 45
- Metal Lumber and Miscellaneous 46
- Filtration Services. 47
- Non Prescription Safety Eyewear 47
- Toner Cartridges 49
- Traffic Signs & Decals 50

Manufacturing Capabilities 51

FLIP THIS CATALOG OVER TO VIEW:

Metals/TECHNICAL Catalog

Shelving
Industrial Pallet Racking
Industrial Catwalk and Mezzanine Systems
Industrial Cantilever Racks
Additional Products

HOW TO ORDER

IT'S AS EASY AS...

1 **Call us toll-free at 800 827-3168.**
Please have your credit card information ready if you are going to charge your purchase.

2 **Fax your order to 859 254-9048.**
Be sure to include all credit card information.

3 **Mail your purchase order to:**
UNICOR Customer Service Center
P.O. Box 11670
Lexington, KY 40577-1670

4 **Order on the Internet: www.unicor.gov**
Click on Industrial Products on our home page for a list of most of the items in this catalog, or enter your stock number (product number) in our shops department to order your products. Have your credit card ready.

If you want a sales representative to call you…

If you need a quote…

If you need a design layout…

If you want assembly or installation of a metal product…

Just call Unicor at (202) 305-3424 or (405) 262-4875 x391 for the local contact nearest you.

TERMS AND CONDITIONS

The Customer Service Center

Contact the FPI Customer Service Center for any questions or assistance regarding the information in this price list. Our business hours are 7:30 a.m. to 6:00 p.m. (EST), Monday through Friday (excluding federal holidays). Our phone number is **800 827-3168.**

Order Acknowledgment

FPI acknowledges every order. Orders are accepted, billed, and invoiced based on the information in this written order confirmation. Should you note any discrepancy, please advise us immediately.

Your order acknowledgment indicates a due date when your product will arrive. In the event your products are manufactured earlier than scheduled, we will ship them upon completion, unless otherwise specified. Project level orders will be coordinated through our Project Managers.

Order Modifications

Modification to your purchase order will be accepted up to four weeks prior to the due date indicated on your order acknowledgment. However, if the revision results in a change in product availability, a new due date may be set by FPI. Such due date adjustments may be for your full purchase order, whether or not the specifications of all line-items on it are modified. All purchase order modifications are acknowledged in writing, including the annotation of any adjusted due date(s). Purchase order cancellations may result in a re-stocking fee.

Standard Lead Time

Typical lead time for product delivery is 60 days after receipt of your order.

Product Delivery and Pricing

We take both FOB Origin and FOB Destination orders. All products are shipped via surface transportation.

On FOB Origin orders, title/product responsibility passes to the customer at the time of shipment. You may arrange your own transportation on FOB Origin orders, coordinating with FPI accordingly. Otherwise, your own order will be shipped by common carrier at your expense.

On FOB Destination orders, title/product responsibility passes to the customer upon delivery to the dock of the designated point of delivery. Freight charges are included in the product prices listed with a FOB Destination column.

Contact the Customer Service Center for destination prices where none are given. Such destination pricing for delivery outside the continental United States must be negotiated based on the freight rates at the time of shipment.

Services such as layout design, storage, inside delivery, and installation, and off-loading are not contained in this price list. Contact a technical representative at 202 305-3424 for a quote on these services.

Geographic Coverage

All shipments for the continental United States include the 48 contiguous states and Washington, D.C.

Special Note on Overseas Shipments

All FOB Destination shipments are prepaid to the Port of Embarkation. All freight and handling charges beyond the port of embarkation are the responsibility of the local government purchasing facility, unless other arrangements are made through FPI. The freight charges for deliveries to Alaska, Hawaii, and foreign countries will be negotiated based on freight rates at the time of delivery. There is an additional 10% crating charge for orders not shipping to the 48 contiguous states. All shipments must include a physical address.

Special Packaging

Standard packaging varies per individual product. FPI will accommodate your special packaging requests; however, an upcharge may apply. Contact the Customer Service Center for more information.

Shipment Claims

FPI products are packaged to comply with carrier requirements. All shipments should be inspected by the consignee before acceptance. The delivering carrier should be requested to record any damage or shortage of items shipped. If any shortages are discovered, please notify the FPI Customer Service Center immediately.

Shipping damage and shortage claims must be filed with the carrier within 15 days of delivery. This applies to both FOB Destination and FOB Origin shipments. Carrier liability ends after 15 days for shipping damages or shortages.

Concealed Damage Claims

Claims for concealed damages must be filed with the carrier within 15 days after the delivery of goods. This applies to both FOB Destination and FOB Origin shipments. Carrier liability ends after 15 days for concealed damages.

Neither FPI nor the carrier will be responsible for damages if shipments are left unopened and/or claims are not filed within 15 days.

Product Storage

If necessary, FPI may store products at the factory at no expense to you for a period not to exceed 30 calendar days; however, such storage is predicated on the availability of our warehouse space at the time of need.

If FPI storage space is not available, or if you require storage in excess of 30 days, we will assist you in finding commercial storage alternatives at current market rates, at your expense.

Customer-Delayed Deliveries

Please notify the Customer Service Center at least two weeks prior to the confirmed due date when you cannot receive delivery of goods by that scheduled date. We will delay the delivery at your request; however, after 30 days of such delay, you will be invoiced for the subject products whether or not delivery is extended beyond the first 30 days.

FPI may allow up to two weeks for shipping. Therefore, if you do not request delayed delivery at least two weeks prior to the confirmed due date for arrival of your shipment, you may incur additional handling costs.

FPI will bill you for such handling costs if you refuse receipt of the goods, or request delayed shipment within less than two weeks prior to the due date on your order acknowledgment.

Product Returns

All product returns must be coordinated in advance with the FPI Customer Service Center. All freight or express service charges must be prepaid on return shipments.

Product returns may be subject to your being invoiced for additional handling/restocking fees. FPI will determine and notify you of such charges upon receipt and inspection of the returned goods.

Order Status

Call the Customer Service Center to obtain status of your order during order processing or the product and shipment/delivery of goods. We will give you the status based on your purchase order number and/or the FPI work order number on your order acknowledgment.

You may also access your order status by clicking on the customer service icon on our website at: www.unicor.gov.

Invoice Payment

Payments from government agencies should be addressed to:

FPI - FPI
P.O. Box 371736
Pittsburgh, PA 15252-7736

Payments from private sector parties should be addressed to:

FPI - LEX
Accounts Receivable
P.O. Box 11670
Lexington, KY 40583-3640

All general billing or specific invoice questions should be directed to the FPI Customer Service Center at **800 827-3168.**

Product Warranty

FPI guarantees all industrial products will be free from defects in materials and workmanship. If at any time an item we have provided does not meet your expectations, we will repair or replace it at our expense.

See MANUFACTURING CAPABILITIES, page 51

UNICOR Offers a Wide Range of Storage Products

…a multiple range of storage products. Our construction is sturdy, durable, and secure. There are a vast array of colors available and handle and door options to meet all of your storage needs.

WARDROBE AND UTILITY STORAGE CABINETS

Unicor offers a wide range of flexibility and choice in the wardrobe and utility storage cabinets line. The applications for which these products can be used is endless, from the front office to the warehouse and barracks. Institutional wardrobes and storage lockers have been a UNICOR specialty for years.

SPORTS LOCKERS

From personal storage lockers to sports lockers, UNICOR has the styles and options you need. Choose from standard widths of 12″, 15″, 18″, and 36″; configurations ranging from single-door to multi-door units; and options like sloped tops and bases that make your lockers right for your space. UNICOR lockers are made of sturdy 24-gauge steel, with 22-gauge tops and bottoms and 16-gauge doors. Lockers are available assembled or unassembled.

LOCKERS AND CABINETS

Wardrobe and Utility Storage Cabinet Door and Closure Styles:

solid door

perforated door
(available on lockers only)

louvered door

knob handle

key/padlock

lift handle

lever handle

squeeze latch handle

WARDROBES AND CABINETS

87" "Marine Corps" Locker (Wardrobe)

Originally designed for the Marine Corps, this two-door, 22-gauge wardrobe features upper and lower shelves, full-width coat rod, four hooks, reinforced doors, towel bars on each door, padlock hasp, hat shelf, and label holder mounted on the door. It has tamper-proof bolts. Equipped with "D" handles and padlock eye for added security (padlock not included). An optional security lock box made of 11-gauge steel can be bolted in place into the lower storage area with tamper-proof bolts. The locker is shipped fully assembled.
Size: 36"W x 24"D x 87"H.

STOCK NO.	DESCRIPTION	DIM. (W/D/H)	WEIGHT (LBS)	PRICE
MCLU243687 □□	Locker Storage Assembled	36" x 24" x 87"	265	▼
SLB1385 □□	Security Lock Box Assembled'	8" x 13" x 5"	12	▼

Double-Door Cabinet (Wardrobe)

This wardrobe is an excellent choice for storing clothing and personal items. It is made of heavy 22-gauge steel with 16-gauge double doors. The four removable shelves on the left side are adjustable on half-inch centers. The wardrobe also comes with a center half-inch partition, a full-width coat rod, hat shelf, two towel bars, two clothes hooks, a label holder mounted on the door, and an inside mirror on the right door. Comes with lift handle locking hardware with a two-point latch mechanism. It has two rear legs. The double-louvered doors are designed for padlock use. It is shipped unassembled. Size: 30"W x 21"D x 78"H.

louver door/ lift handle

STOCK NO.	DESCRIPTION	DIM. (W/D/H)	WEIGHT (LBS)	PRICE
DDLU213078 □□	Unassembled	30" x 21" x 78"	193	▼

1 Select a finish color.

2 Place 2-digit color code at end of stock no.

Parchment	08
Black	27
Sand	28
Dove Gray	29
Lt. Gray	53

Additional colors may be available. Please call (202) 305-3424 for more information.

84" Drawer Locker (Wardrobe)

Providing all the comforts of home, this 3-drawer, 22-gauge steel wardrobe includes two small drawers and a full-width drawer for small items. Drawers operate on four adjustable rollers or glides. Wardrobe section has a coat rod and two coat hooks, with a separate shelf above. Double 16-gauge steel doors are louvered for ventilation. Equipped with lever handles. Included are label holders and a number plate. Shipped unassembled; assembled drawer units shipped separately. Size: 36"W x 24"D x 84"H.

louver door/ lever handle

STOCK NO.	DESCRIPTION	DIM. (W/D/H)	WEIGHT (LBS)	PRICE
WLKU243684 □□	Unassembled	36" x 24" x 84"	322	

Double-Door Storage Cabinet

This double-door (24-gauge) metal storage cabinet holds six adjustable shelves for storing supplies in stockrooms, toolrooms, warehouses, and offices. The shelves are supported on two-inch centers, the full width of the cabinet. The heavy gauge steel cabinet has 22-gauge steel double doors. Comes with squeeze latch locking hardware with a two-point latch mechanism. Cabinet is shipped unassembled but can be shipped assembled at an additional cost. Size: 36"W x 18"D x 64"H and 36"W x 18"D x 78"H.

STOCK NO.	DESCRIPTION	DIM. (W/D/H)	WEIGHT (LBS)	PRICE
DDSC183664 □□	Unassembled	36" x 18" x 64"	126	▼
DDSCA183664 □□	Assembled	36" x 18" x 64"	126	▼
DDSC183678 □□	Unassembled	36" x 18" x 78"	150	▼
DDSCA18367829	Assembled	36" x 18" x 78"	150	▼

solid door/squeeze latch handle

Storage Locker

This compact wardrobe can be stacked in factories and stockrooms, using bolted construction. Made of heavy 22-gauge steel, it has 16-gauge double doors for extra durability. The interior features two hooks, and two shelves, and the louvered back provides ventilation. Double doors have a padlock-ready knob handle. Shipped assembled. Available in two sizes: 24"W x 18"D x 40"H and 24"W x 18"D x 60"H.

solid door/knob handle

STOCK NO.	DESCRIPTION	DIM. (W/D/H)	WEIGHT (LBS)	PRICE
SSLU182440 □□	Assembled	24" x 18" x 40"	90	▼
SSLU182440 53	Storage Locker, Personal (Lt. Gray)	24" x 18" x 40"	90	▼
SSLU182460 □□	Assembled	24" x 18" x 60"	110	▼

Price is FOB Destination, and there is a 25 item maximum quantity per order.

Double-Door Storage/Wardrobe Cabinet

Constructed of 24-gauge steel, this combination unit offers both shelf and wardrobe storage. The cabinet offers six adjustable shelves on the left half and a coat rod on the right half. Shelves are adjustable on 2-inch centers that do not require tools or separate clips. Double doors are contructed of 22-gauge steel and feature a flush-mounted squeeze latch locking hardware with a two-point latch mechanism. Attractive as well as durable, this cabinet has a powder epoxy finish. Size: 36"W x 18"D x 64"H and 36"W x 18"D x 78"H.

STOCK NO.	DESCRIPTION	DIM. (W/D/H)	WEIGHT (LBS)	PRICE
DSCW183664 □□	Double-Door Storage/ Wardrobe Cabinet (unassembled)	36" x 18" x 64"	124	▼
DSCWA183664 □□	Double-Door Storage/ Wardrobe Cabinet (Assembled)	36" x 18" x 64"	124	▼
DSCW183678 □□	Double-Door Storage/ Wardrobe Cabinet (unassembled)	36" x 18" x 78"	146	▼
DSCWA183678 □□	Double-Door Storage/ Wardrobe Cabinet (Assembled)	36" x 18" x 78"	146	▼

solid door/squeeze latch handle

WARDROBES AND CABINETS

Contemporary Double-Door Wardrobe Cabinet

Constructed of 22-gauge steel, this double-door wardrobe cabinet is perfect for storing clothing. It features flush-mounted, squeeze latch locking hardware with a two-point latch mechanism. A durable and attractive wardrobe, this cabinet has a powder epoxy finish and a full-width coat rod. Size: 36"W x 18"D x 64"H and 36"W x 18"D x 78"H.

solid door/ squeeze latch handle

STOCK NO.	DESCRIPTION	DIM. (W/D/H)	WEIGHT (LBS)	PRICE
CABU183664 □□	Unassembled	36" x 18" x 64"		▼
CABUA183664 □□	Assembled	36" x 18" x 64"		▼
CABU183678 □□	Unassembled	36" x 18" x 78"		▼
CABUA183678 □□	Assembled	36" x 18" x 78"		▼

Contemporary Single-Door Storage

UNICOR constructs this storage unit of 24-gauge steel. It features six shelves that are adjustable on two-inch centers that do not require tools or separate clips. Flush-mounted, squeeze latch locking hardware with a two-point latch mechanism provides superb protection.

solid door/ squeeze latch handle

STOCK NO.	DESCRIPTION	DIM. (W/D/H)	WEIGHT (LBS)	PRICE
CSSU181864 □□	Unassembled	18" x 18" x 64"		▼
CSSUA181864 □□	Assembled	18" x 18" x 64"		▼
CSSU181878 □□	Unassembled	18" x 18" x 78"		▼
CSSUA181878 □□	Assembled	18" x 18" x 78"		▼

1 Select a finish color.

2 Place 2-digit color code at end of stock no.

Parchment	08
Black	27
Sand	28
Dove Gray	29
Lt. Gray	53

Additional colors may be available. Please call (202) 305-3424 for more information.

Contemporary Single-Door Wardrobe

This wardrobe offers you a choice of a left- or right-opening door that features flush-mounted, squeeze latch locking hardware with a two-point latch mechanism.

STOCK NO.	DESCRIPTION	DIM. (W/D/H)	WEIGHT (LBS)	PRICE
CSWU181864R □□	Unassembled, Right	18" x 18" x 64"		▼
CSWUA181864R □□	Assembled, Right	18" x 18" x 64"		▼
CSWU181864L □□	Unassembled, Left	18" x 18" x 64"		▼
CSWUA181864L □□	Assembled, Left	18" x 18" x 64"		▼
CSWU181878 □□	Unassembled, Right	18" x 18" x 78"		▼
CSWUA181878 □□	Assembled, Right	18" x 18" x 78"		▼

solid door/ squeeze latch handle

Single-Door Clothing Locker

Durable and functional, this wardrobe is ideal for storing clothing and personal items in barracks, gymnasiums, schools, hospitals, or shops. The wardrobe is made of heavy gauge steel with a 16-gauge steel door set in a rigid angle frame. The single-tier wardrobe comes with legs and a semilouvered door for ventilation. It is equipped with four coat hooks, coat rod, hat shelf, and lift-type handle with padlock eye for added security (padlock not included). Wardrobe has a number plate for identification. The wardrobe comes in 4 sizes, both unassembled and assembled.

louver door/lift handle

STOCK NO.	DESCRIPTION	DIM. (W/D/H)	WEIGHT (LBS)	PRICE
LSCU211878 ☐☐	Unassembled	18" x 21" x 78"		▼
LSCA211878 ☐☐	Assembled	18" x 21" x 78"		▼
LSCU241878 ☐☐	Unassembled	18" x 24" x 78"		▼
LSCU24187829	Unassembled (Dove Gray)	18" x 24" x 78"		▼
LSCA241878 ☐☐	Assembled	18" x 24" x 78"		▼
LSCA24187829	Assembled (Dove Gray)	18" x 24" x 78"		▼
LSCU181578 ☐☐	Unassembled	15" x 18" x 78"		▼
LSCU211872 ☐☐	Unassembled	18" x 21" x 72"		▼

Single-Door Wardrobe Cabinet

This cabinet is amply sized but takes up little space. The cabinet door is made of 20-gauge steel; is equipped with a hat rack, and a coat rod the full width of the cabinet; and is secured with a self-contained locking handle. The cabinet is shipped unassembled, but can be shipped assembled at an additional cost. Offered with right-hand doors only.

solid door/lever handle

STOCK NO.	DESCRIPTION	DIM. (W/D/H)	WEIGHT (LBS)	PRICE
CABU182478 ☐☐	Unassembled	24" x 18" x 78"	130	▼
CABA182478 ☐☐	Assembled	24" x 18" x 78"	130	▼

Price is FOB Destination, and there is a 25 item maximum quantity per order.

Double Clothing Locker

The double wardrobe is two single wardrobes with legs, joined by a common center wall. The wardrobes are made of heavy gauge steel. Wardrobes come with semilouvered doors for ventilation, a number plate for identification, and lift-type handle with eye for padlock, combination lock, or key lock (lock not included). Bolted construction adds durability.

louver door/lift handle

STOCK NO.	DESCRIPTION	DIM. (W/D/H)	WEIGHT (LBS)	PRICE
DCLU213678 ☐☐	Unassembled	36" x 21" x 78"	198	▼
DCLA213678 ☐☐	Assembled	36" x 21" x 78"	215	▼
DCLU243678 ☐☐	Unassembled	36" x 24" x 78"	200	▼
DCLA243678 ☐☐	Assembled	36" x 24" x 78"	218	▼

LOCKERS AND CABINETS

SPORTS LOCKERS

From personal storage lockers to sports lockers, UNICOR has the styles and options you need. Our lockers are made of sturdy 24-gauge steel, with 22-gauge tops and bottoms and 16-gauge doors. Our sports lockers have key/padlock and lift handles.

Door Styles

Choose from standard, high-privacy louvered, orsolid openings, or opt for the greater ventilation of louvered or perforated patterns — especially good for use in fitness centers.

perforated door

louvered door

solid door

Sports Lockers

From personal storage lockers to sports lockers, UNICOR has the styles and options you need. Choose from standard widths of 12", 15", 18", and 36"; configurations ranging from single-door to multi-door units; and options like sloped tops and bases that make your lockers right for your space. UNICOR lockers are made of sturdy 24-gauge steel, with 22-gauge tops and bottoms and 16-gauge doors. Lockers are available assembled or unassembled.

Sports Lockers Accessories

Sloped Top

Closed Base

Sloped Tops

Keep your locker tops free of extra belongings and dirt with these sloping tops for single-tier lockers or upper units of multi-tier lockers. Use rear supports to attach.

Closed Bases

These base pieces keep dust and debris from collecting beneath lockers. Front and end bases easily attach to lockers and are available for all lockers with support legs.

Unit pictured with sloped top.

Single Locker With Louvered Doors

STOCK NO.	DESCRIPTION	DIM. (W/D/H)	WEIGHT (LBS)	PRICE
LCS91012 □□	Assembled w/legs	18" x 21" x 78"		▼
LCS91013 □□	Unassembled	18" x 21" x 78"		▼
LCS91014 □□	Assembled w/legs	18" x 24" x 78"		▼
LCS91015 □□	Unassembled	18" x 24" x 78"		▼
LCS91016 □□	Unassembled	15" x 18" x 78"		▼
LCS91017 □□	Unassembled wo/legs	18" x 21" x 72"		▼
LCS96015 * □□	Assembled w/legs	12" x 18" x 78" *		▼
LCS96016 □□	Unassembled	12" x 18" x 78" *		▼
LSCU241878 □□	Unassembled	18" x 24" x 78"		▼
LSCA241878 □□	Assembled	18" x 24" x 78"		▼

**Call about special shipping requirements. Slope top kit = $19*

Note: Perforated doors available as an option only on 4- and 6-tier lockers.

Unit pictured with base front.

1 Select a finish color.

2 Place 2-digit color code at end of stock no.

Parchment	08
Black	27
Sand	28
Dove Gray	29
Lt. Gray	53

Additional colors may be available. Please call (202) 305-3424 for more information.

Single-Door Clothing Locker

In 15″ or 18″ widths, 18″ or 21″ depths, and an overall height of 78″ with legs or 72″ without legs, these lockers are made of sturdy steel and feature a lever-style handle that accommodates a padlock.

STOCK NO.	DESCRIPTION	DIM. (W/D/H)	WEIGHT (LBS)	PRICE
LSCU211878 □□	Unassembled	18" x 21" x 78"	103	▼
LSCA211878 □□	Assembled	18" x 21" x 78"	117	▼
LSCU211872 □□	Unassembled	18" x 21" x 72"	98	▼
LSCU181578 □□	Unassembled	15" x 18" x 78"	89	▼

MULTI-TIER SPORTS LOCKERS

Choose from standard widths of 12", 15", 18", and 36" configurations ranging from single-door to multi-door units and options like sloped tops and bases that make your lockers right for your space. UNICOR lockers are made of sturdy 24-gauge steel, with 22-gauge tops and bottoms and 16-gauge doors. Lockers can be provided assembled.

Note: Perforated doors available as only option on 4- and 6-tier lockers.

Unit pictured with sloped top, base front and sides. (Sold separately; see chart on page 11 for details)

Two-Tier Locker With Louvered Doors

STOCK NO.	DESCRIPTION	DIM. (W/D/H)	WEIGHT (LBS)	PRICE
LCS95004 ☐☐	Louvered, Assembled w/legs	15" x 18" x 78"		▼
LCS95002 ☐☐	Louvered, Unassembled w/legs	15" x 18" x 78"		▼
LCS95003 ☐☐	Louvered, Assembled w/legs	12" x 18" x 78"		▼
LCS95001 ☐☐	Louvered, Unassembled w/legs	12" x 18" x 78"		▼

Unit pictured with sloped top and legs. (Sold separately; see chart on page 11 for details)

Four-Tier Locker With Legs and Louvered Doors

STOCK NO.	DESCRIPTION	DIM. (W/D/H)	WEIGHT (LBS)	PRICE
LCS95005 ☐☐	Assembled w/legs	12" x 18" x 78"		▼
LCS95006 ☐☐	Unassembled w/legs	12" x 18" x 78"		▼

**Ideal where space is at a premium*

Four-Tier Locker With Legs and Perforated Doors *(not shown)*

STOCK NO.	DESCRIPTION	DIM. (W/D/H)	WEIGHT (LBS)	PRICE
LCS95007 ☐☐	Assembled w/legs	12" x 18" x 78"		▼
LCS95008 ☐☐	Unassembled w/legs	12" x 18" x 78"		▼

Unit pictured with base front and sides. (Sold separately; see chart on page 11 for details)

Six-Tier Locker With Legs and Louvered or Perforated Doors

STOCK NO.	DESCRIPTION	DIM. (W/D/H)	WEIGHT (LBS)	PRICE
LCS95009 ☐☐	Louvered, Assembled w/legs	12" x 18" x 78"		▼
LCS95010 ☐☐	Louvered, Unassembled w/legs	12" x 18" x 78"		▼
LCS95011 ☐☐	Perforated, Assembled w/legs	12" x 18" x 78"		▼
LCS95012 ☐☐	Perforated, Unassembled w/legs	12" x 18" x 78"		▼

1. Select a finish color.
2. Place 2-digit color code at end of stock no.

Parchment	08
Black	27
Sand	28
Dove Gray	29
Lt. Gray	53

Additional colors may be available. Please call (202) 305-3424 for more information.

Heavy-Duty Storage Locker

Our heavy-duty storage locker features fully welded construction for use in areas where extra security and durability are desired. Locker is 24″ deep, 48″ wide, and 72″ tall, and features a 30″ wide door with padlockable sliding barrel bolt. Locker is fabricated from 1″ steel square tubing and 16-gauge perforated panels. Interior features one solid 14-gauge shelf plus four side shelves that are fixed. Included is a 30″ clothes rod. Standard color is black, but other colors are available upon request.
Shipping weight is 346 lbs.

STOCK NO.	DESCRIPTION	DIM. (W/D/H)	PRICE
LKR0305 □□	Storage Locker w/30" door (open mesh)	48" x 24" x 72"	▼

1 Select a finish color.

2 Place 2-digit color code at end of stock no.

Parchment	08
Black	27
Sand	28
Dove Gray	29
Lt. Gray	53

Additional colors may be available. Please call (202) 305-3424 for more information.

Sloped Top

Closed Base

Sports Locker ACCESSORIES

STOCK NO.	DESCRIPTION	DIM. (W/D/H)	WEIGHT (LBS)	PRICE
BSFT12 □□	Base Front	12"		▼
BSFT15 □□	Base Front	15"		▼
BSFT18 □□	Base Front	18"		▼
BSSD18 □□	Base Side	18"		▼
BSSD21 □□	Base Side	21"		▼
BSSD24 □□	Base Side	24"		▼

STOCK NO.	DESCRIPTION	DIM. (W/D/H)	WEIGHT (LBS)	PRICE
SLTP1218 □□	Sloped Top	12" x 18"		▼
SLTP1518 □□	Sloped Top	15" x 18"		▼
SLTP1821 □□	Sloped Top	18" x 21"		▼
SLTP1824 □□	Sloped Top	18" x 24"		▼

SHELVING

STEEL SHELVING

Whether you choose our ready-to-assemble shelving packages, component parts for custom shelving, or the flexible clip-type shelving, UNICOR has the shelving you need. You'll find our merchandise strong and durable.

It's as easy as 1, 2, 3, 4 to specify your shelving. Refer to the following graphic pictorial of each step.

HOW TO SELECT STEEL SHELVING:

1 Select a Style/Type:

- Open shelving with detachable bolt fasteners
- Open shelving with clip-type fasteners
- Closed shelving with detachable bolt fasteners
- Closed shelving with clip-type fasteners
- Ledge shelving
- Counter shelving
- Wire shelving

Each style offers a wide range of applications with many accessory items to maximize your storage requirements.

open shelving

closed shelving

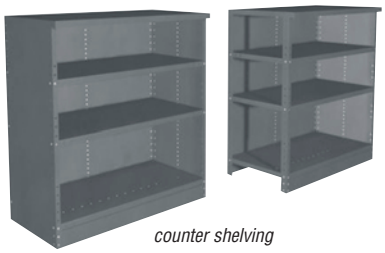

counter shelving

ledge shelving

2 Choose a Size:

UNICOR shelving is available in a wide range of depths, widths, and heights.

Widths	Depths
24"	12"
30"	15"
36"	18"
42"	24"
48"	30"
	36"

Standard sizes are found on page 36

Shelf Height	Number of Openings	Number of Shelves
75"	6	7
87"	7	8
99"	8	9
111"	9	10

Numerous additional sizes available up to 171"

3

Determine a Configuration:

UNICOR accepts customer-supplied layout and designs or offers assistance based on your available floor space. UNICOR staff will assist you in the selection of the style that best fits your requirements and will provide complete design and layout services of your storage areas, if requested. Call (202) 305-3424 or (405) 262-4875 ext. 391, for assistance.

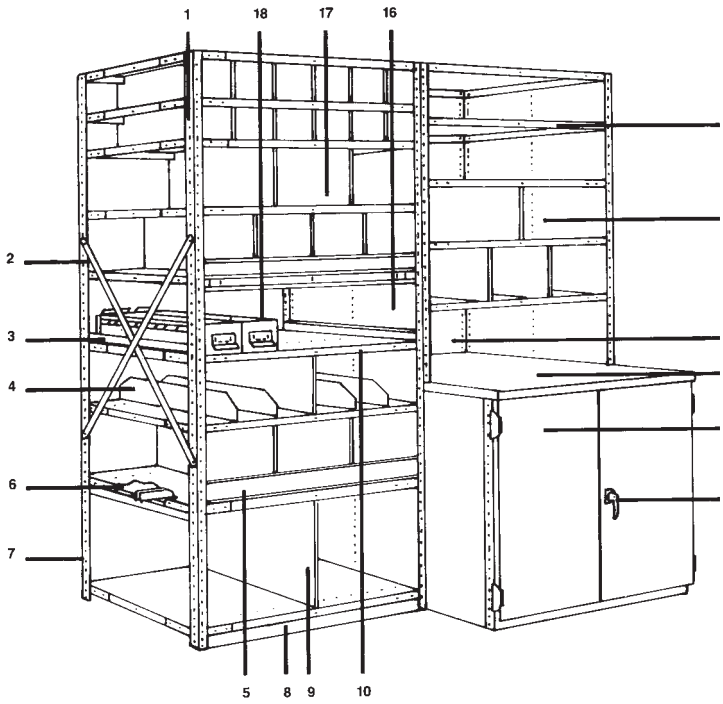

1. *Angle-Sway Braces*
2. *Cross-Strap Braces*
3. *Flush Bars*
4. *Angle Bin Dividers*
5. *Bin Front*
6. *Shelf Reinforcing Side and Center Angles*
7. *Corner Post or Upright*
8. *Base Strip*
9. *Bin Dividers*
10. *Label Holders*
11. *Double Door*
11-L. *Handle Lock*
12. *Ledge Shelf*
13. *Back Panel*
14. *End Panel*
15. *Plain Shelf*
16. *Intermediate Partition*
17. *Bin Dividers*
18. *Storage Drawer*

4

Determine Load-Bearing Capacity:

UNICOR shelving is available in three classes of strength. Each class has a different weight capacity.

Standard Shelf Sizes		LBS Per Shelf			
WIDTH	DEPTH	CLASS 1	CLASS 1A	CLASS 2	CLASS 3
24"	12"	700	1000	1200	2000
24"	15"	700	1000	1150	2000
24"	18"	700	900	1000	2200
24"	24"	700	900	1000	1700
24"	30"	700	800	900	1600
24"	36"	700	800	900	1500
30"	12"	600	900	1200	1800
30"	15"	600	900	1200	1750
30"	18"	600	800	1100	1700
30"	24"	600	800	1050	1650
30"	30"	600	750	1000	1600
30"	36"	550	650	950	1600
36"	12"	400	800	1000	1500
36"	15"	400	750	1100	1650
36"	18"	450	750	1000	1800
36"	24"	450	700	1000	1700
36"	30"	450	700	860	1500
36"	36"	450	500	700	1300
42"	12"	300	350	700	850
42"	15"	300	350	600	900
42"	18"	350	400	525	1300
42"	24"	300	350	700	1200
42"	30"	300	350	650	1050
42"	36"	300	350	650	1050
48"	12"	300	320	400	560
48"	15"	300	320	400	750
48"	18"	300	320	400	650
48"	24"	300	400	520	1000
48"	30"	300	400	400	1150
48"	36"	250	390	420	1000

OPEN STEEL SHELVING - NUT & BOLT

Quality Shelves

With UNICOR steel shelving components, you can easily construct custom storage configurations that make the best use of your space. A basic unit is self-standing and includes all shelves and corner posts using angle-sway braces. A rack of units combines two or more units side by side or back to back. Standard units have shelves spaced 12" apart on centers, adjustable on 1" centers throughout the height of the units. All components comply and exceed GSA and Federal Government requirements.

For special configurations and sizes not listed and installation/off-load needs, call (202) 305-3424 or (405) 262-4875 ext. 391.

Call for specifications of Class 3 capacity shelves.

Open Steel Shelving Units/ Nut & Bolt

24"W X 12"D SHELF ■ *Class 1A*

STOCK NO.	WEIGHT (LBS)	INITIAL/ ADDITIONAL	W	D	H	SHELVES	PRICE
SHV0001 □□	82	I	24"	12"	75"	7	▼
SHV0002 □□	77	A	24"	12"	75"	7	▼
SHV0007 □□	94	I	24"	12"	87"	8	▼
SHV0008 □□	88	A	24"	12"	87"	8	▼
SHV0013 □□	106	I	24"	12"	99"	9	▼
SHV0014 □□	99	A	24"	12"	99"	9	▼
SHV0019 □□	118	I	24"	12"	111"	10	▼
SHV0020 □□	110	A	24"	12"	111"	10	▼

24"W X 12"D SHELF ■ *Class 2*

STOCK NO.	WEIGHT (LBS)	INITIAL/ ADDITIONAL	W	D	H	SHELVES	PRICE
SHV0003 □□	92	I	24"	12"	75"	7	▼
SHV0004 □□	87	A	24"	12"	75"	7	▼
SHV0009 □□	105	I	24"	12"	87"	8	▼
SHV0010 □□	99	A	24"	12"	87"	8	▼
SHV0015 □□	114	I	24"	12"	99"	9	▼
SHV0016 □□	112	A	24"	12"	99"	9	▼
SHV0021 □□	132	I	24"	12"	111"	10	▼
SHV0022 □□	124	A	24"	12"	111"	10	▼

24"W X 15"D SHELF ■ *Class 1A*

STOCK NO.	WEIGHT (LBS)	INITIAL/ ADDITIONAL	W	D	H	SHELVES	PRICE
SHV0026 □□	85	A	24"	15"	75"	7	▼
SHV0031 □□	103	I	24"	15"	87"	8	▼
SHV0032 □□	97	A	24"	15"	87"	8	▼
SHV0037 □□	117	I	24"	15"	99"	9	▼
SHV0038 □□	110	A	24"	15"	99"	9	▼
SHV0043 □□	130	I	24"	15"	111"	10	▼
SHV0044 □□	122	A	24"	15"	111"	10	▼

24"W X 15"D SHELF ■ *Class 2*

STOCK NO.	WEIGHT (LBS)	INITIAL/ ADDITIONAL	W	D	H	SHELVES	PRICE
SHV0027 □□	100	I	24"	15"	75"	7	▼
SHV0028 □□	95	A	24"	15"	75"	7	▼
SHV0033 □□	115	I	24"	15"	87"	8	▼
SHV0034 □□	109	A	24"	15"	87"	8	▼
SHV0039 □□	130	I	24"	15"	99"	9	▼
SHV0040 □□	123	A	24"	15"	99"	9	▼
SHV0045 □□	144	I	24"	15"	111"	10	▼
SHV0046 □□	136	A	24"	15"	111"	10	▼

1 Select a finish color.

2 Place 2-digit color code at end of stock no.

Parchment	08
Black	27
Sand	28
Dove Gray	29
Lt. Gray	53

Additional colors may be available. Please call (202) 305-3424 for more information.

Call for specifications of Class 3 capacity shelves.

24"W X 18"D SHELF ■ *Class 1A*

STOCK NO.	WEIGHT (LBS)	INITIAL/ ADDITIONAL	W	D	H	SHELVES	PRICE
SHV0049 □□	99	I	24"	18"	75"	7	▼
SHV0050 □□	94	A	24"	18"	75"	7	▼
SHV0055 □□	113	I	24"	18"	87"	8	▼
SHV0056 □□	107	A	24"	18"	87"	8	▼
SHV0061 □□	128	I	24"	18"	99"	9	▼
SHV0062 □□	121	A	24"	18"	99"	9	▼
SHV0067 □□	142	I	24"	18"	111"	10	▼
SHV0068 □□	134	A	24"	18"	111"	10	▼

24"W X 18"D SHELF ■ *Class 2*

STOCK NO.	WEIGHT (LBS)	INITIAL/ ADDITIONAL	W	D	H	SHELVES	PRICE
SHV0051 □□	108	I	24"	18"	75"	7	▼
SHV0052 □□	103	A	24"	18"	75"	7	▼
SHV0057 □□	124	I	24"	18"	87"	8	▼
SHV0058 □□	118	A	24"	18"	87"	8	▼
SHV0063 □□	140	I	24"	18"	99"	9	▼
SHV0064 □□	133	A	24"	18"	99"	9	▼
SHV0069 □□	156	I	24"	18"	111"	10	▼
SHV0070 □□	148	A	24"	18"	111"	10	▼

24"W X 24"D SHELF ■ *Class 1A*

STOCK NO.	WEIGHT (LBS)	INITIAL/ ADDITIONAL	W	D	H	SHELVES	PRICE
SHV0073 □□	115	I	24"	24"	75"	7	▼
SHV0074 □□	110	A	24"	24"	75"	7	▼
SHV0079 □□	132	I	24"	24"	87"	8	▼
SHV0080 □□	126	A	24"	24"	87"	8	▼
SHV0085 □□	149	I	24"	24"	99"	9	▼
SHV0086 □□	142	A	24"	24"	99"	9	▼
SHV0091 □□	166	I	24"	24"	111"	10	▼
SHV0092 □□	158	A	24"	24"	111"	10	▼

24"W X 24"D SHELF ■ *Class 2*

STOCK NO.	WEIGHT (LBS)	INITIAL/ ADDITIONAL	W	D	H	SHELVES	PRICE
SHV0075 □□	125	I	24"	24"	75"	7	▼
SHV0076 □□	120	A	24"	24"	75"	7	▼
SHV0081 □□	143	I	24"	24"	87"	8	▼
SHV0082 □□	137	A	24"	24"	87"	8	▼
SHV0087 □□	162	I	24"	24"	99"	9	▼
SHV0088 □□	155	A	24"	24"	99"	9	▼
SHV0093 □□	182	I	24"	24"	111"	10	▼
SHV0094 □□	172	A	24"	24"	111"	10	▼

36"W X 12"D SHELF ■ *Class 1A*

STOCK NO.	WEIGHT (LBS)	INITIAL/ ADDITIONAL	W	D	H	SHELVES	PRICE
SHV0097 □□	106	I	36"	12"	75"	7	▼
SHV0098 □□	101	A	36"	12"	75"	7	▼
SHV0103 □□	122	I	36"	12"	87"	8	▼
SHV0104 □□	116	A	36"	12"	87"	8	▼
SHV0109 □□	138	I	36"	12"	99"	9	▼
SHV0110 □□	131	A	36"	12"	99"	9	▼
SHV0115 □□	153	I	36"	12"	111"	10	▼
SHV0116 □□	146	A	36"	12"	111"	10	▼

36"W X 12"D SHELF ■ *Class 2*

STOCK NO.	WEIGHT (LBS)	INITIAL/ ADDITIONAL	W	D	H	SHELVES	PRICE
SHV0099 □□	122	I	36"	12"	75"	7	▼
SHV0100 □□	117	A	36"	12"	75"	7	▼
SHV0105 □□	139	I	36"	12"	87"	8	▼
SHV0106 □□	133	A	36"	12"	87"	8	▼
SHV0111 □□	157	I	36"	12"	99"	9	▼
SHV0112 □□	150	A	36"	12"	99"	9	▼
SHV0117 □□	175	I	36"	12"	111"	10	▼
SHV0118 □□	167	A	36"	12"	111"	10	▼

OPEN STEEL SHELVING - NUT & BOLT

Call for specifications of Class 3 capacity shelves.

36"W X 15"D SHELF ■ *Class 1A*

STOCK NO.	WEIGHT (LBS)	INITIAL/ ADDITIONAL	W	D	H	SHELVES	PRICE
SHV0121 □□	118	I	36"	15"	75"	7	▼
SHV0122 □□	113	A	36"	15"	75"	7	▼
SHV0127 □□	135	I	36"	15"	87"	8	▼
SHV0128 □□	129	A	36"	15"	87"	8	▼
SHV0133 □□	152	I	36"	15"	99"	9	▼
SHV0134 □□	146	A	36"	15"	99"	9	▼
SHV0139 □□	169	I	36"	15"	111"	10	▼
SHV0140 □□	161	A	36"	15"	111"	10	▼

36"W X 15"D SHELF ■ *Class 2*

STOCK NO.	WEIGHT (LBS)	INITIAL/ ADDITIONAL	W	D	H	SHELVES	PRICE
SHV0123 □□	133	I	36"	15"	75"	7	▼
SHV0124 □□	128	A	36"	15"	75"	7	▼
SHV0129 □□	152	I	36"	15"	87"	8	▼
SHV0130 □□	146	A	36"	15"	87"	8	▼
SHV0135 □□	172	I	36"	15"	99"	9	▼
SHV0136 □□	165	A	36"	15"	99"	2	▼
SHV0141 □□	191	I	36"	15"	111"	10	▼
SHV0142 □□	183	A	36"	15"	111"	10	▼

36"W X 18"D SHELF ■ *Class 1A*

STOCK NO.	WEIGHT (LBS)	INITIAL/ ADDITIONAL	W	D	H	SHELVES	PRICE
SHV0145 □□	129	I	36"	18"	75"	7	▼
SHV0146 □□	124	A	36"	18"	75"	7	▼
SHV0151 □□	147	I	36"	18"	87"	8	▼
SHV0152 □□	141	A	36"	18"	87"	8	▼
SHV0157 □□	166	I	36"	18"	99"	9	▼
SHV0158 □□	159	A	36"	18"	99"	9	▼
SHV0163 □□	185	I	36"	18"	111"	10	▼
SHV0164 □□	177	A	36"	18"	111"	10	▼

36"W X 18"D SHELF ■ *Class 2*

STOCK NO.	WEIGHT (LBS)	INITIAL/ ADDITIONAL	W	D	H	SHELVES	PRICE
SHV0147 □□	145	I	36"	18"	75"	7	▼
SHV0148 □□	140	A	36"	18"	75"	7	▼
SHV0153 □□	165	I	36"	18"	87"	8	▼
SHV0154 □□	159	A	36"	18"	87"	8	▼
SHV0159 □□	186	I	36"	18"	99"	9	▼
SHV0160 □□	179	A	36"	18"	99"	9	▼
SHV0165 □□	207	I	36"	18"	111"	10	▼
SHV0166 □□	199	A	36"	18"	111"	10	▼

36"W X 24"D SHELF ■ *Class 1A*

STOCK NO.	WEIGHT (LBS)	INITIAL/ ADDITIONAL	W	D	H	SHELVES	PRICE
SHV0169 □□	151	I	36"	24"	75"	7	▼
SHV0170 □□	146	A	36"	24"	75"	7	▼
SHV0175 □□	173	I	36"	24"	87"	8	▼
SHV0176 □□	167	A	36"	24"	87"	8	▼
SHV0181 □□	195	I	36"	24"	99"	9	▼
SHV0182 □□	188	A	36"	24"	99"	9	▼
SHV0187 □□	217	I	36"	24"	111"	10	▼
SHV0188 □□	209	A	36"	24"	111"	10	▼

36"W X 24"D SHELF ■ *Class 2*

STOCK NO.	WEIGHT (LBS)	INITIAL/ ADDITIONAL	W	D	H	SHELVES	PRICE
SHV0171 □□	167	I	36"	24"	75"	7	▼
SHV0172 □□	162	A	36"	24"	75"	7	▼
SHV0177 □□	191	I	36"	24"	87"	8	▼
SHV0178 □□	185	A	36"	24"	87"	8	▼
SHV0183 □□	215	I	36"	24"	99"	9	▼
SHV0184 □□	209	A	36"	24"	99"	9	▼
SHV0189 □□	239	I	36"	24"	111"	10	▼
SHV0190 □□	231	A	36"	24"	111"	10	▼

1 Select a finish color.

2 Place 2-digit color code at end of stock no.

Parchment	08
Black	27
Sand	28
Dove Gray	29
Lt. Gray	53

Additional colors may be available. Please call (202) 305-3424 for more information.

CLOSED STEEL SHELVING - NUT & BOLT

Closed Steel Shelving

Closed shelving provides a more finished appearance and reduces the risk of items slipping through open sides. Shelving consists of one initial unit plus one or more additional units. The additional units are identical to the initial unit but have no partition or end panel. Top and bottom shelves are fixed and other shelves are available on 1" centers. Using components listed on the next few pages, you can build UNICOR shelving units into many configurations, and use accessories described on pages 26-27 to increase functionality. Detailed component listings are also available from our Customer Service Center at (800) 827-3168, (202) 305-3424, or (405) 262-4875 ext. 391.

initial unit plus two additional units

Closed Steel Shelving Units/ Nut & Bolt

Call for specifications of Class 3 capacity shelves.

24"W X 12"D SHELF ■ *Class 1A*

STOCK NO.	WEIGHT (LBS)	INITIAL/ ADDITIONAL	W	D	H	SHELVES	PRICE
SHV0301 □□	100	I	24"	12"	75"	7	▼
SHV0302 □□	93	A	24"	12"	75"	7	▼
SHV0307 □□	116	I	24"	12"	87"	8	▼
SHV0308 □□	107	A	24"	12"	87"	8	▼
SHV0313 □□	132	I	24"	12"	99"	9	▼
SHV0314 □□	122	A	24"	12"	99"	9	▼
SHV0319 □□	149	I	24"	12"	111"	10	▼
SHV0320 □□	138	A	24"	12"	111"	10	▼

24"W X 12"D SHELF ■ *Class 2*

STOCK NO.	WEIGHT (LBS)	INITIAL/ ADDITIONAL	W	D	H	SHELVES	PRICE
SHV0303 □□	110	I	24"	12"	75"	7	▼
SHV0304 □□	103	A	24"	12"	75"	7	▼
SHV0309 □□	128	I	24"	12"	87"	8	▼
SHV0310 □□	119	A	24"	12"	87"	8	▼
SHV0315 □□	146	I	24"	12"	99"	9	▼
SHV0316 □□	135	A	24"	12"	99"	9	▼
SHV0321 □□	163	I	24"	12"	111"	40	▼
SHV0322 □□	152	A	24"	12"	111"	10	▼

24"W X 15"D SHELF ■ *Class 1A*

STOCK NO.	WEIGHT (LBS)	INITIAL/ ADDITIONAL	W	D	H	SHELVES	PRICE
SHV0325 □□	112	I	24"	15"	75"	7	▼
SHV0326 □□	103	A	24"	15"	75"	7	▼
SHV0331 □□	130	I	24"	15"	87"	8	▼
SHV0332 □□	119	A	24"	15"	87"	8	▼
SHV0337 □□	148	I	24"	15"	99"	9	▼
SHV0338 □□	136	A	24"	15"	99"	9	▼
SHV0343 □□	166	I	24"	15"	111"	10	▼
SHV0344 □□	152	A	24"	15"	111"	10	▼

24"W X 15"D SHELF ■ *Class 2*

STOCK NO.	WEIGHT (LBS)	INITIAL/ ADDITIONAL	W	D	H	SHELVES	PRICE
SHV0327 □□	122	I	24"	15"	75"	7	▼
SHV0328 □□	113	A	24"	15"	75"	7	▼
SHV0333 □□	141	I	24"	15"	87"	8	▼
SHV0334 □□	130	A	24"	15"	87"	8	▼
SHV0339 □□	160	I	24"	15"	99"	9	▼
SHV0340 □□	148	A	24"	15"	99"	9	▼
SHV0345 □□	180	I	24"	15"	111"	10	▼
SHV0346 □□	166	A	24"	15"	111"	10	▼

1. Select a finish color.
2. Place 2-digit color code at end of stock no.

Parchment	08
Black	27
Sand	28
Dove Gray	29
Lt. Gray	53

Additional colors may be available. Please call (202) 305-3424 for more information.

Call for specifications of Class 3 capacity shelves.

CLOSED STEEL SHELVING - NUT & BOLT

24"W X 18"D SHELF ■ *Class 1A*

STOCK NO.	WEIGHT (LBS)	INITIAL/ ADDITIONAL	W	D	H	SHELVES	PRICE
SHV0349 □□	124	I	24"	18"	75"	7	▼
SHV0350 □□	113	A	24"	18"	75"	7	▼
SHV0355 □□	144	I	24"	18"	87"	18	▼
SHV0356 □□	131	A	24"	18"	87"	8	▼
SHV0361 □□	164	I	24"	18"	99"	9	▼
SHV0362 □□	149	A	24"	18"	99"	9	▼
SHV0367 □□	183	I	24"	18"	111"	10	▼
SHV0368 □□	166	A	24"	18"	111"	10	▼

24"W X 18"D SHELF ■ *Class 2*

STOCK NO.	WEIGHT (LBS)	INITIAL/ ADDITIONAL	W	D	H	SHELVES	PRICE
SHV0351 □□	134	I	24"	18"	75"	7	▼
SHV0352 □□	123	A	24"	18"	75"	7	▼
SHV0357 □□	155	I	24"	18"	87"	8	▼
SHV0358 □□	142	A	24"	18"	87"	8	▼
SHV0363 □□	176	I	24"	18"	99"	9	▼
SHV0364 □□	161	A	24"	18"	99"	9	▼
SHV0369 □□	197	I	24"	18"	111"	10	▼
SHV0370 □□	180	A	24"	18"	111"	10	▼

24"W X 12"D SHELF ■ *Class 1A*

STOCK NO.	WEIGHT (LBS)	INITIAL/ ADDITIONAL	W	D	H	SHELVES	PRICE
SHV0373 □□	150	I	24"	24"	75"	7	▼
SHV0374 □□	135	A	24"	24"	75"	7	▼
SHV0379 □□	176	I	24"	24"	87"	8	▼
SHV0380 □□	156	A	24"	24"	87"	8	▼
SHV0385 □□	197	I	24"	24"	99"	9	▼
SHV0386 □□	177	A	24"	24"	99"	9	▼
SHV0391 □□	220	I	24"	24"	111"	10	▼
SHV0392 □□	197	A	24"	24"	111"	10	▼

24"W X 12"D SHELF ■ *Class 2*

STOCK NO.	WEIGHT (LBS)	INITIAL/ ADDITIONAL	W	D	H	SHELVES	PRICE
SHV0375 □□	160	I	24"	24"	75"	7	▼
SHV0376 □□	145	A	24"	24"	75"	7	▼
SHV0381 □□	185	I	24"	24"	87"	8	▼
SHV0382 □□	167	A	24"	24"	87"	8	▼
SHV0387 □□	210	I	24"	24"	99"	9	▼
SHV0388 □□	190	A	24"	24"	99"	9	▼
SHV0393 □□	234	I	24"	24"	111"	10	▼
SHV0394 □□	211	A	24"	24"	111"	10	▼

36"W X 12"D SHELF ■ *Class 1A*

STOCK NO.	WEIGHT (LBS)	INITIAL/ ADDITIONAL	W	D	H	SHELVES	PRICE
SHV0397 □□	132	I	36"	12"	75"	7	▼
SHV0398 □□	125	A	36"	12"	75"	7	▼
SHV0403 □□	153	I	36"	12"	87"	8	▼
SHV0404 □□	144	A	36"	12"	87"	8	▼
SHV0409 □□	174	I	36"	12"	99"	9	▼
SHV0410 □□	164	A	36"	12"	99"	9	▼
SHV0415 □□	195	I	36"	12"	111"	10	▼
SHV0416 □□	184	A	36"	12"	111"	10	▼

36"W X 12"D SHELF ■ *Class 2*

STOCK NO.	WEIGHT (LBS)	INITIAL/ ADDITIONAL	W	D	H	SHELVES	PRICE
SHV0399 □□	148	I	36"	12"	75"	7	▼
SHV0400 □□	141	A	36"	12"	75"	7	▼
SHV0405 □□	171	I	36"	12"	87"	8	▼
SHV0406 □□	162	A	36"	12"	87"	8	▼
SHV0411 □□	194	I	36"	12"	99"	9	▼
SHV0412 □□	184	A	36"	12"	99"	9	▼
SHV0417 □□	217	I	36"	12"	111"	10	▼
SHV0418 □□	206	A	36"	12"	111"	10	▼

1 — Select a finish color.

2 — Place 2-digit color code at end of stock no.

Parchment	08
Black	27
Sand	28
Dove Gray	29
Lt. Gray	53

Additional colors may be available. Please call (202) 305-3424 for more information.

Call for specifications of Class 3 capacity shelves.

36"W X 15"D SHELF ■ *Class 1A*

STOCK NO.	WEIGHT (LBS)	INITIAL/ ADDITIONAL	W	D	H	SHELVES	PRICE
SHV0421 □□	146	I	36"	15"	75"	7	▼
SHV0422 □□	138	A	36"	15"	75"	7	▼
SHV0427 □□	170	I	36"	15"	87"	8	▼
SHV0428 □□	159	A	36"	15"	87"	8	▼
SHV0433 □□	193	I	36"	15"	99"	9	▼
SHV0434 □□	181	A	36"	15"	99"	9	▼
SHV0439 □□	217	I	36"	15"	111"	10	▼
SHV0440 □□	203	A	36"	15"	111"	10	▼

36"W X 15"D SHELF ■ *Class 2*

STOCK NO.	WEIGHT (LBS)	INITIAL/ ADDITIONAL	W	D	H	SHELVES	PRICE
SHV0423 □□	162	I	36"	15"	75"	7	▼
SHV0424 □□	153	A	36"	15"	75"	7	▼
SHV0429 □□	188	I	36"	15"	87"	8	▼
SHV0430 □□	177	A	36"	15"	87"	8	▼
SHV0435 □□	213	I	36"	15"	99"	9	▼
SHV0436 □□	201	A	36"	15"	99"	9	▼
SHV0441 □□	239	I	36"	15"	111"	10	▼
SHV0442 □□	225	A	36"	15"	111"	10	▼

36"W X 18"D SHELF ■ *Class 1A*

STOCK NO.	WEIGHT (LBS)	INITIAL/ ADDITIONAL	W	D	H	SHELVES	PRICE
SHV0445 □□	162	I	36"	18"	75"	7	▼
SHV0446 □□	151	A	36"	18"	75"	7	▼
SHV0451 □□	187	I	36"	18"	87"	8	▼
SHV0452 □□	174	A	36"	18"	87"	8	▼
SHV0457 □□	213	I	36"	18"	99"	9	▼
SHV0458 □□	198	A	36"	18"	99"	9	▼
SHV0463 □□	238	I	36"	18"	111"	10	▼
SHV0464 □□	221	A	36"	18"	111"	10	▼

36"W X 18"D SHELF ■ *Class 2*

STOCK NO.	WEIGHT (LBS)	INITIAL/ ADDITIONAL	W	D	H	SHELVES	PRICE
SHV0447 □□	177	I	36"	18"	75"	7	▼
SHV0448 □□	166	A	36"	18"	75"	7	▼
SHV0453 □□	205	I	36"	18"	87"	8	▼
SHV0454 □□	192	A	36"	18"	87"	8	▼
SHV0459 □□	233	I	36"	18"	99"	9	▼
SHV0460 □□	218	A	36"	18"	99"	9	▼
SHV0465 □□	260	I	36"	18"	111"	10	▼
SHV0466 □□	243	A	36"	18"	111"	10	▼

36"W X 24"D SHELF ■ *Class 1A*

STOCK NO.	WEIGHT (LBS)	INITIAL/ ADDITIONAL	W	D	H	SHELVES	PRICE
SHV0469 □□	194	I	36"	24"	75"	7	▼
SHV0470 □□	179	A	36"	24"	75"	7	▼
SHV0475 □□	223	I	36"	24"	87"	8	▼
SHV0476 □□	205	A	36"	24"	87"	8	▼
SHV0481 □□	253	I	36"	24"	99"	9	▼
SHV0482 □□	233	A	36"	24"	99"	9	▼
SHV0487 □□	283	I	36"	24"	111"	10	▼
SHV0488 □□	260	A	36"	24"	111"	10	▼

36"W X 24"D SHELF ■ *Class 2*

STOCK NO.	WEIGHT (LBS)	INITIAL/ ADDITIONAL	W	D	H	SHELVES	PRICE
SHV0471 □□	209	I	36"	24"	75"	7	▼
SHV0472 □□	194	A	36"	24"	75"	7	▼
SHV0477 □□	241	I	36"	24"	87"	8	▼
SHV0478 □□	223	A	36"	24"	87"	8	▼
SHV0483 □□	273	I	36"	24"	99"	9	▼
SHV0484 □□	253	A	36"	24"	99"	9	▼
SHV0489 □□	305	I	36"	24"	111"	10	▼
SHV0490 □□	282	A	36"	24"	111"	10	▼

closed steel shelving, initial unit and one additional unit

COUNTER SHELVING - NUT & BOLT

Counter Shelving Units

Counter shelving has a smooth top ideal for a work surface. The counter top plus the top and bottom shelves are fixed. Additional units are the same as the initial unit without one partition or end panel. Units are 39" high, depths range from 12" to 24", and the units are available in three load capacities (call for specifications of Class 3 capacity shelves.) This shelving is available in a variety of standard or custom colors.

Call for specifications of Class 3 capacity shelves.

1 Select a finish color.

2 Place 2-digit color code at end of stock no.

Parchment	08
Black	27
Sand	28
Dove Gray	29
Lt. Gray	53

Additional colors may be available. Please call (202) 305-3424 for more information.

Counter Shelving Units

24" W X 12" D ■ *Class 1A*

STOCK NO.	WEIGHT (LBS)	INITIAL/ ADDITIONAL	W	D	H	SHELVES	PRICE
SHV0601 nn	63	I	24"	12"	39"	2	▼
SHV0602 □□	57	A	24"	12"	39"	2	▼

24" W X 12" D ■ *Class 2*

STOCK NO.	WEIGHT (LBS)	INITIAL/ ADDITIONAL	W	D	H	SHELVES	PRICE
SHV0603 □□	66	I	24"	12"	39"	2	▼
SHV0604 □□	63	A	24"	12"	39"	2	▼

24" W X 15" D ■ *Class 1A*

STOCK NO.	WEIGHT (LBS)	INITIAL/ ADDITIONAL	W	D	H	SHELVES	PRICE
SHV0613 □□	68	I	24"	15"	39"	2	▼
SHV0614 □□	64	A	24"	15"	39"	2	▼

24" W X 15" D ■ *Class 2*

STOCK NO.	WEIGHT (LBS)	INITIAL/ ADDITIONAL	W	D	H	SHELVES	PRICE
SHV0615 □□	74	I	24"	15"	39"	2	▼
SHV0616 □□	70	A	24"	15"	39"	2	▼

24" W X 18" D ■ *Class 1A*

STOCK NO.	WEIGHT (LBS)	INITIAL/ ADDITIONAL	W	D	H	SHELVES	PRICE
SHV0625 □□	76	I	24"	18"	39"	2	▼
SHV0626 □□	71	A	24"	18"	39"	2	▼

24" W X 18" D ■ *Class 2*

STOCK NO.	WEIGHT (LBS)	INITIAL/ ADDITIONAL	W	D	H	SHELVES	PRICE
SHV0627 □□	82	I	24"	18"	39"	2	▼
SHV0628 □□	77	A	24"	18"	39"	2	▼

24" W X 24" D ■ *Class 1A*

STOCK NO.	WEIGHT (LBS)	INITIAL/ ADDITIONAL	W	D	H	SHELVES	PRICE
SHV0637 □□	94	I	24"	24"	39"	2	▼
SHV0638 □□	86	A	24"	24"	39"	2	▼

24" W X 24" D ■ *Class 2*

STOCK NO.	WEIGHT (LBS)	INITIAL/ ADDITIONAL	W	D	H	SHELVES	PRICE
SHV0639 □□	100	I	24"	24"	39"	2	▼
SHV0640 □□	92	A	24"	24"	39"	2	▼

24" W X 30" D ■ *Class 1A*

STOCK NO.	WEIGHT (LBS)	INITIAL/ ADDITIONAL	W	D	H	SHELVES	PRICE
SHV0649 □□	110	I	24"	30"	39"	2	▼
SHV0650 □□	100	A	24"	30"	39"	2	▼

24" W X 30" D ■ *Class 2*

STOCK NO.	WEIGHT (LBS)	INITIAL/ ADDITIONAL	W	D	H	SHELVES	PRICE
SHV0651 □□	116	I	24"	30"	39"	2	▼
SHV0652 □□	106	A	24"	30"	39"	2	▼

24" W X 36" D ■ *Class 1A*

STOCK NO.	WEIGHT (LBS)	INITIAL/ ADDITIONAL	W	D	H	SHELVES	PRICE
SHV0661 □□	127	I	24"	36"	39"	2	▼
SHV0662 □□	115	A	24"	36"	39"	2	▼

24" W X 36" D ■ *Class 1A*

STOCK NO.	WEIGHT (LBS)	INITIAL/ ADDITIONAL	W	D	H	SHELVES	PRICE
SHV0663 □□	132	I	24"	36"	39"	2	▼
SHV0664 □□	120	A	24"	36"	39"	2	▼

Order an initial unit to be placed at the end of each row break of shelving units and additional units for all units within a row of shelving.

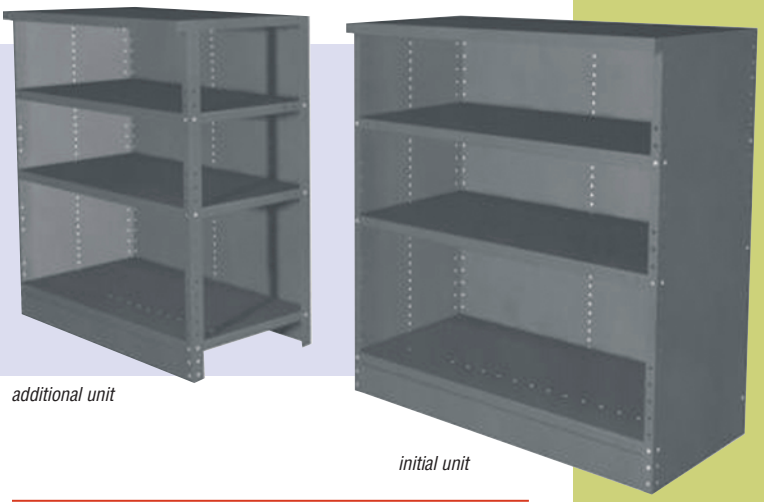

additional unit

initial unit

36" W X 12" D ■ *Class 1A*

STOCK NO.	WEIGHT (LBS)	INITIAL/ ADDITIONAL	W	D	H	SHELVES	PRICE
SHV0607 □□	83	I	36"	12"	39"	2	▼
SHV0608 □□	80	A	36"	12"	39"	2	▼

36" W X 12" D ■ *Class 2*

STOCK NO.	WEIGHT (LBS)	INITIAL/ ADDITIONAL	W	D	H	SHELVES	PRICE
SHV0609 □□	91	I	36"	12"	39"	2	▼
SHV0610 □□	88	A	36"	12"	39"	2	▼

36" W X 15" D ■ *Class 1A*

STOCK NO.	WEIGHT (LBS)	INITIAL/ ADDITIONAL	W	D	H	SHELVES	PRICE
SHV0619 □□	93	I	36"	15"	39"	2	▼
SHV0620 □□	89	A	36"	15"	39"	2	▼

36" W X 15" D ■ *Class 2*

STOCK NO.	WEIGHT (LBS)	INITIAL/ ADDITIONAL	W	D	H	SHELVES	PRICE
SHV0621 □□	102	I	36"	15"	39"	2	▼
SHV0622 □□	98	A	36"	15"	39"	2	▼

36" W X 18" D ■ *Class 1A*

STOCK NO.	WEIGHT (LBS)	INITIAL/ ADDITIONAL	W	D	H	SHELVES	PRICE
SHV0631 □□	103	I	36"	18"	39"	2	▼
SHV0632 □□	98	A	36"	18"	39"	2	▼

36" W X 18" D ■ *Class 2*

STOCK NO.	WEIGHT (LBS)	INITIAL/ ADDITIONAL	W	D	H	SHELVES	PRICE
SHV0633 □□	112	I	36"	18"	39"	2	▼
SHV0634 □□	106	A	36"	18"	39"	2	▼

36" W X 24" D ■ *Class 1A*

STOCK NO.	WEIGHT (LBS)	INITIAL/ ADDITIONAL	W	D	H	SHELVES	PRICE
SHV0643 □□	126	I	36"	24"	39"	2	▼
SHV0644 □□	118	A	36"	24"	39"	2	▼

36" W X 24" D ■ *Class 2*

STOCK NO.	WEIGHT (LBS)	INITIAL/ ADDITIONAL	W	D	H	SHELVES	PRICE
SHV0645 □□	135	I	36"	24"	39"	2	▼
SHV0646 □□	127	A	36"	24"	39"	2	▼

36" W X 30" D ■ *Class 1A*

STOCK NO.	WEIGHT (LBS)	INITIAL/ ADDITIONAL	W	D	H	SHELVES	PRICE
SHV0655 □□	146	I	36"	30"	39"	2	▼
SHV0656 □□	136	A	36"	30"	39"	2	▼

36" W X 30" D ■ *Class 1A*

STOCK NO.	WEIGHT (LBS)	INITIAL/ ADDITIONAL	W	D	H	SHELVES	PRICE
SHV0657 □□	155	I	36"	30"	39"	2	▼
SHV0658 □□	145	A	36"	30"	39"	2	▼

36" W X 36" D ■ *Class 1A*

STOCK NO.	WEIGHT (LBS)	INITIAL/ ADDITIONAL	W	D	H	SHELVES	PRICE
SHV0667 □□	167	I	36"	36"	39"	2	▼
SHV0668 □□	156	A	36"	36"	39"	2	▼

36" W X 36" D ■ *Class 2*

STOCK NO.	WEIGHT (LBS)	INITIAL/ ADDITIONAL	W	D	H	SHELVES	PRICE
SHV0669 □□	176	I	36"	36"	39"	2	▼
SHV0670 □□	164	A	36"	36"	39"	2	▼

Call for specifications of Class 3 capacity shelves.

1 — Select a finish color.

2 — Place 2-digit color code at end of stock no.

Parchment	08
Black	27
Sand	28
Dove Gray	29
Lt. Gray	53

Additional colors may be available. Please call (202) 305-3424 for more information.

LEDGE SHELVING - NUT & BOLT

ledge shelving, initial unit and one additional unit

Ledge Shelving Units

Ledge shelving has a smooth work surface. The ledge and the top and bottom shelves are fixed, and the other shelves are adjustable on 1″ centers. Additional units are the same as the initial unit without one partition or end panel. Widths range from 24″ to 36″ and the units are available in three load capacities. Comes in a variety of colors. Shelving accessories can be ordered for this shelving (see page 26-27).

NOTE: Order an initial unit to be placed at the end of each row break of shelving units and additional units for all units within a row of shelving.

Call for specifications of Class 3 capacity shelves.

1. Select a finish color.
2. Place 2-digit color code at end of stock no.

Parchment 08

Black 27

Sand 28

Dove Gray 29

Lt. Gray 53

Additional colors may be available. Please call (202) 305-3424 for more information.

Ledge Shelving Units

24"W X 12"TD X 24"BD ■ *Class 1A*

STOCK NO.	WT (LBS)	INITIAL/ ADD.	WIDTH	TOP DEPTH	BOT. DEPTH	HEIGHT	SHELVES	PRICE
SHV0801 □□	136	I	24"	12"	24"	75"	7	▼
SHV0802 □□	124	A	24"	12"	24"	75"	7	▼
SHV0807 □□	152	I	24"	12"	24"	87"	8	▼
SHV0808 □□	139	A	24"	12"	24"	87"	8	▼
SHV0813 □□	166	I	24"	12"	24"	99"	9	▼
SHV0814 □□	152	A	24"	12"	24"	99"	9	▼
SHV0819 □□	184	I	24"	12"	24"	111"	10	▼
SHV0820 □□	170	A	24"	12"	24"	111"	10	▼

24"W X 12"TD X 24"BD ■ *Class 2*

STOCK NO.	WT (LBS)	INITIAL/ ADD.	WIDTH	TOP DEPTH	BOT. DEPTH	HEIGHT	SHELVES	PRICE
SHV0803 □□	144	I	24"	12"	24"	75"	7	▼
SHV0804 □□	132	A	24"	12"	24"	75"	7	▼
SHV0809 □□	161	I	24"	12"	24"	87"	8	▼
SHV0810 □□	148	A	24"	12"	24"	87"	8	▼
SHV0815 □□	179	I	24"	12"	24"	99"	9	▼
SHV0816 □□	165	A	24"	12"	24"	99"	9	▼
SHV0821 □□	197	I	24"	12"	24"	111"	10	▼
SHV0822 □□	182	A	24"	12"	24"	111"	10	▼

24"W X 15"TD X 30"BD ■ *Class 1A*

STOCK NO.	WT (LBS)	INITIAL/ ADD.	WIDTH	TOP DEPTH	BOT. DEPTH	HEIGHT	SHELVES	PRICE
SHV0825 □□	141	I	24"	15"	24"	75"	7	▼
SHV0826 □□	129	A	24"	15"	24"	75"	7	▼
SHV0831 □□	159	I	24"	15"	24"	87"	8	▼
SHV0832 □□	146	A	24"	15"	24"	87"	8	▼
SHV0837 □□	177	I	24"	15"	24"	99"	9	▼
SHV0838 □□	161	A	24"	15"	24"	99"	9	▼
SHV0843 □□	195	I	24"	15"	24"	111"	10	▼
SHV0844 □□	178	A	24"	15"	24"	111"	10	▼

24"W X 15"TD X 30"BD ■ *Class 2*

STOCK NO.	WT (LBS)	INITIAL/ ADD.	WIDTH	TOP DEPTH	BOT. DEPTH	HEIGHT	SHELVES	PRICE
SHV0827 □□	149	I	24"	15"	24"	75"	7	▼
SHV0828 □□	137	A	24"	15"	24"	75"	7	▼
SHV0833 □□	168	I	24"	15"	24"	87"	8	▼
SHV0834 □□	154	A	24"	15"	24"	87"	8	▼
SHV0839 □□	188	I	24"	15"	24"	99"	9	▼
SHV0840 □□	172	A	24"	15"	24"	99"	9	▼
SHV0845 □□	207	I	24"	15"	24"	111"	10	▼
SHV0846 □□	190	A	24"	15"	24"	111"	10	▼

Call for specifications of Class 3 capacity shelves.

24"W X 18"TD X 30"BD ■ *Class 1A*

STOCK NO.	WT (LBS)	INITIAL/ ADD.	WIDTH	TOP DEPTH	BOT. DEPTH	HEIGHT	SHELVES	PRICE
SHV0849 □□	160	I	24"	18"	30"	75"	7	▼
SHV0850 □□	149	A	24"	18"	30"	75"	7	▼
SHV0855 □□	180	I	24"	18"	30"	87"	8	▼
SHV0856 □□	163	A	24"	18"	30"	87"	8	▼
SHV0861 □□	200	I	24"	18"	30"	99"	9	▼
SHV0862 □□	182	A	24"	18"	30"	99"	9	▼
SHV0867 □□	220	I	24"	18"	30"	111"	10	▼
SHV0868 □□	200	A	24"	18"	30"	111"	10	▼

24"W X 18"TD X 30"BD ■ *Class 2*

SHV0851 □□	169	I	24"	18"	30"	75"	7	▼
SHV0852 □□	154	A	24"	18"	30"	75"	7	▼
SHV0857 □□	190	I	24"	18"	30"	87"	8	▼
SHV0858 □□	173	A	24"	18"	30"	87"	8	▼
SHV0863 □□	211	I	24"	18"	30"	99"	9	▼
SHV0864 □□	193	A	24"	18"	30"	99"	9	▼
SHV0869 □□	232	I	24"	18"	30"	111"	10	▼
SHV0870 □□	212	A	24"	18"	30"	111"	10	▼

24"W X 18"TD X 36"BD ■ *Class 1A*

STOCK NO.	WT (LBS)	INITIAL/ ADD.	WIDTH	TOP DEPTH	BOT. DEPTH	HEIGHT	SHELVES	PRICE
SHV0873 □□	176	I	24"	18"	36"	75"	7	▼
SHV0874 □□	159	A	24"	18"	36"	75"	7	▼
SHV0879 □□	195	I	24"	18"	36"	87"	8	▼
SHV0880 □□	176	A	24"	18"	36"	87"	8	▼
SHV0885 □□	215	I	24"	18"	36"	99"	9	▼
SHV0886 □□	195	A	24"	18"	36"	99"	9	▼
SHV0891 □□	235	I	24"	18"	36"	111"	10	▼
SHV0892 □□	213	A	24"	18"	36"	111"	10	▼

24"W X 18"TD X 36"BD ■ *Class 2*

SHV0875 □□	184	I	24"	18"	36"	75"	7	▼
SHV0876 □□	167	A	24"	18"	36"	75"	7	▼
SHV0881 □□	205	I	24"	18"	36"	87"	8	▼
SHV0882 □□	186	A	24"	18"	36"	87"	8	▼
SHV0887 □□	226	I	24"	18"	36"	99"	9	▼
SHV0888 □□	206	A	24"	18"	36"	99"	9	▼
SHV0893 □□	247	I	24"	18"	36"	111"	10	▼
SHV0894 □□	225	A	24"	18"	36"	111"	10	▼

24"W X 24"TD X 36"BD ■ *Class 1A*

STOCK NO.	WT (LBS)	INITIAL/ ADD.	WIDTH	TOP DEPTH	BOT. DEPTH	HEIGHT	SHELVES	PRICE
SHV0897 □□	188	I	24"	24"	36"	75"	7	▼
SHV0898 □□	169	A	24"	24"	36"	75"	7	▼
SHV0903 □□	211	I	24"	24"	36"	87"	8	▼
SHV0904 □□	189	A	24"	24"	36"	87"	8	▼
SHV0909 □□	235	I	24"	24"	36"	99"	9	▼
SHV0910 □□	211	A	24"	24"	36"	99"	9	▼
SHV0915 □□	258	I	24"	24"	36"	111"	10	▼
SHV0916 □□	231	A	24"	24"	36"	111"	10	▼

24"W X 24"TD X 36"BD ■ *Class 2*

SHV0899 □□	197	I	24"	24"	36"	75"	7	▼
SHV0900 □□	178	A	24"	24"	36"	75"	7	▼
SHV0905 □□	221	I	24"	24"	36"	87"	8	▼
SHV0906 □□	199	A	24"	24"	36"	87"	8	▼
SHV0911 □□	246	I	24"	24"	36"	99"	9	▼
SHV0912 □□	222	A	24"	24"	36"	99"	9	▼
SHV0917 □□	271	I	24"	24"	36"	111"	10	▼
SHV0918 □□	244	A	24"	24"	36"	111"	10	▼

1. Select a finish color.
2. Place 2-digit color code at end of stock no.

Parchment	08
Black	27
Sand	28
Dove Gray	29
Lt. Gray	53

Additional colors may be available. Please call (202) 305-3424 for more information.

LEDGE SHELVING - NUT & BOLT

ledge shelving, initial unit and one additional unit

Ledge Shelving Units

36"W X 12"TD X 24"BD ■ *Class 1A*

STOCK NO.	WT (LBS)	INITIAL/ ADD.	WIDTH	TOP DEPTH	BOT. DEPTH	HEIGHT	SHELVES	PRICE
SHV0921 □□	176	I	36"	12"	24"	75"	7	▼
SHV0922 □□	165	A	36"	12"	24"	75"	7	▼
SHV0927 □□	196	I	36"	12"	24"	87"	8	▼
SHV0928 □□	183	A	36"	12"	24"	87"	8	▼
SHV0933 □□	217	I	36"	12"	24"	99"	9	▼
SHV0934 □□	203	A	36"	12"	24"	99"	9	▼
SHV0939 □□	238	I	36"	12"	24"	111"	10	▼
SHV0940 □□	223	A	36"	12"	24"	111"	10	▼

36"W X 12"TD X 24"BD ■ *Class 2*

SHV0923 □□	188	I	36"	12"	24"	75"	7	▼
SHV0924 □□	178	A	36"	12"	24"	75"	7	▼
SHV0929 □□	212	I	36"	12"	24"	87"	8	▼
SHV0930 □□	199	A	36"	12"	24"	87"	8	▼
SHV0935 □□	235	I	36"	12"	24"	99"	9	▼
SHV0936 □□	221	A	36"	12"	24"	99"	9	▼
SHV0941 □□	258	I	36"	12"	24"	111"	10	▼
SHV0942 □□	243	A	36"	12"	24"	111"	10	▼

36"W X 15"TD X 24"BD ■ *Class 1A*

STOCK NO.	WT (LBS)	INITIAL/ ADD.	WIDTH	TOP DEPTH	BOT. DEPTH	HEIGHT	SHELVES	PRICE
SHV0945 □□	182	I	36"	15"	24"	75"	7	▼
SHV0946 □□	170	A	36"	15"	24"	75"	7	▼
SHV0951 □□	205	I	36"	15"	24"	87"	8	▼
SHV0952 □□	191	A	36"	15"	24"	87"	8	▼
SHV0957 □□	228	I	36"	15"	24"	99"	9	▼
SHV0958 □□	213	A	36"	15"	24"	99"	9	▼
SHV0963 □□	251	I	36"	15"	24"	111"	10	▼
SHV0964 □□	234	A	36"	15"	24"	111"	10	▼

36"W X 15"TD X 24"BD ■ *Class 2*

SHV0947 □□	195	I	36"	15"	24"	75"	7	▼
SHV0948 □□	183	A	36"	15"	24"	75"	7	▼
SHV0953 □□	220	I	36"	15"	24"	87"	8	▼
SHV0954 □□	206	A	36"	15"	24"	87"	8	▼
SHV0959 □□	246	I	36"	15"	24"	99"	9	▼
SHV0960 □□	231	A	36"	15"	24"	99"	9	▼
SHV0965 □□	271	I	36"	15"	24"	111"	10	▼
SHV0966 □□	254	A	36"	15"	24"	111"	10	▼

36"W X 18"TD X 30"BD ■ *Class 1A*

STOCK NO.	WT (LBS)	INITIAL/ ADD.	WIDTH	TOP DEPTH	BOT. DEPTH	HEIGHT	SHELVES	PRICE
SHV0969 □□	206	I	36"	18"	30"	75"	7	▼
SHV0970 □□	191	A	36"	18"	30"	75"	7	▼
SHV0975 □□	233	I	36"	18"	30"	87"	8	▼
SHV0976 □□	216	A	36"	18"	30"	87"	8	▼
SHV0981 □□	257	I	36"	18"	30"	99"	9	▼
SHV0982 □□	238	A	36"	18"	30"	99"	9	▼
SHV0987 □□	282	I	36"	18"	30"	111"	10	▼
SHV0988 □□	262	A	36"	18"	30"	111"	10	▼

1 Select a finish color.

2 Place 2-digit color code at end of stock no.

Parchment	08
Black	27
Sand	28
Dove Gray	29
Lt. Gray	53

Additional colors may be available. Please call (202) 305-3424 for more information.

Call for specifications of Class 3 capacity shelves.

36"W X 18"TD X 30"BD ■ *Class 2*

SHV0971 □□	220	I	36"	18"	30"	75"	7	▼
SHV0972 □□	205	A	36"	18"	30"	75"	7	▼
SHV0977 □□	247	I	36"	18"	30"	87"	8	▼
SHV0978 □□	230	A	36"	18"	30"	87"	8	▼
SHV0983 □□	275	I	36"	18"	30"	99"	9	▼
SHV0984 □□	256	A	36"	18"	30"	99"	9	▼
SHV0989 □□	302	I	36"	18"	30"	111"	10	▼
SHV0990 □□	228	A	36"	18"	30"	111"	10	▼

36"W X 18"TD X 36"BD ■ *Class 1A*

STOCK NO.	WT (LBS)	INITIAL/ ADD.	WIDTH	TOP DEPTH	BOT. DEPTH	HEIGHT	SHELVES	PRICE
SHV0993 □□	225	I	36"	18"	36"	75"	7	▼
SHV0994 □□	208	A	36"	18"	36"	75"	7	▼
SHV0999 □□	250	I	36"	18"	36"	87"	8	▼
SHV1000 □□	231	A	36"	18"	36"	87"	8	▼
SHV1005 □□	276	I	36"	18"	36"	99"	9	▼
SHV1006 □□	256	A	36"	18"	36"	99"	9	▼
SHV1011 □□	301	I	36"	18"	36"	111"	10	▼
SHV1012 □□	276	A	36"	18"	36"	111"	10	▼

36"W X 18"TD X 36"BD ■ *Class 2*

SHV0995 □□	239	I	36"	18"	36"	75"	7	▼
SHV0996 □□	221	A	36"	18"	36"	75"	7	▼
SHV1001 □□	266	I	36"	18"	36"	87"	8	▼
SHV1002 □□	247	A	36"	18"	36"	87"	8	▼
SHV1007 □□	293	I	36"	18"	36"	99"	9	▼
SHV1008 □□	273	A	36"	18"	36"	99"	9	▼
SHV1013 □□	308	I	36"	18"	36"	111"	10	▼
SHV1014 □□	284	A	36"	18"	36"	111"	10	▼

36"W X 24"TD X 36"BD ■ *Class 1A*

STOCK NO.	WT (LBS)	INITIAL/ ADD.	WIDTH	TOP DEPTH	BOT. DEPTH	HEIGHT	SHELVES	PRICE
SHV1017 □□	240	I	36"	24"	36"	75"	7	▼
SHV1018 □□	221	A	36"	24"	36"	75"	7	▼
SHV1023 □□	270	I	36"	24"	36"	87"	8	▼
SHV1024 □□	248	A	36"	24"	36"	87"	8	▼
SHV1029 □□	300	I	36"	24"	36"	99"	9	▼
SHV1030 □□	276	A	36"	24"	36"	99"	9	▼
SHV1035 □□	330	I	36"	24"	36"	111"	10	▼
SHV1036 □□	303	A	36"	24"	36"	111"	10	▼

36"W X 24"TD X 36"BD ■ *Class 2*

SHV1019 □□	243	I	36"	24"	36"	75"	7	▼
SHV1020 □□	224	A	36"	24"	36"	75"	7	▼
SHV1025 □□	276	I	36"	24"	36"	87"	8	▼
SHV1026 □□	254	A	36"	24"	36"	87"	8	▼
SHV1031 □□	308	I	36"	24"	36"	99"	9	▼
SHV1032 □□	284	A	36"	24"	36"	99"	9	▼
SHV1037 □□	339	I	36"	24"	36"	111"	10	▼
SHV1038 □□	312	A	36"	24"	36"	111"	10	▼

ledge shelving, initial unit and one additional unit

1. Select a finish color.
2. Place 2-digit color code at end of stock no.

Parchment	08
Black	27
Sand	28
Dove Gray	29
Lt. Gray	53

Additional colors may be available. Please call (202) 305-3424 for more information.

NUT & BOLT ACCESSORIES

Build Your Own or Expand Components

Flanged Bin Divider

Full height dividers are used to create small, individual storage bins within the shelving unit, while angle and sliding dividers subdivide the shelf surface. Full height and angle dividers are fixed in place; sliding dividers are easily moved to accommodate changing storage needs.

DEPTH	HEIGHT				
12”	6	7½	9	12	16½
18”	6	7½	9	12	16½
24”	6		9	12	

Flanged Bin Divider

STOCK NO.	WEIGHT (LBS)	DIM. (D/H)	PRICE
SHV5013 nn	.9	12" x 6"	▼
SHV5014 □□	1.2	15" x 6"	▼
SHV5015 □□	1.5	18" x 6"	▼
SHV5016 □□	2.1	24" x 6"	▼
SHV5017 □□	1.3	12" x 8"	▼
SHV5018 □□	1.6	15" x 8"	▼
SHV5019 □□	1.9	18" x 8"	▼
SHV5020 □□	2.5	24" x 8"	▼
SHV5021 □□	1.5	12" x 10"	▼
SHV5022 □□	1.8	15" x 10"	▼
SHV5023 □□	2.2	18" x 10"	▼
SHV5024 □□	3.0	24" x 10"	▼
SHV5025 □□	1.9	12" x 12"	▼
SHV5026 □□	2.3	15" x 12"	▼
SHV5027 □□	2.7	18" x 12"	▼
SHV5028 □□	3.5	24" x 12"	▼
SHV5029 □□	4.3	30" x 12"	▼
SHV5030 □□	5.1	36" x 12"	▼
SHV5031 □□	2.2	18" x 12"	▼
SHV5032 □□	2.9	15" x 18"	▼
SHV5033 □□	3.6	18" x 18"	▼
SHV5034 □□	5.0	24" x 18"	▼
SHV5035 □□	6.4	30" x 18"	▼
SHV5036 □□	7.8	36" x 18"	▼
SHV5037 □□	4.5	12" x 24"	▼
SHV5038 □□	5.6	15" x 24"	▼
SHV5039 □□	6.7	18" x 24"	▼
SHV5040 □□	8.9	24" x 24"	▼
SHV5045 □□	11.1	30" x 24"	▼
SHV5046 □□	13.3	36" x 24"	▼

1. Select a finish color.
2. Place 2-digit color code at end of stock no.

Parchment	08
Black	27
Sand	28
Dove Gray	29
Lt. Gray	53

Additional colors may be available. Please call (202) 305-3424 for more information.

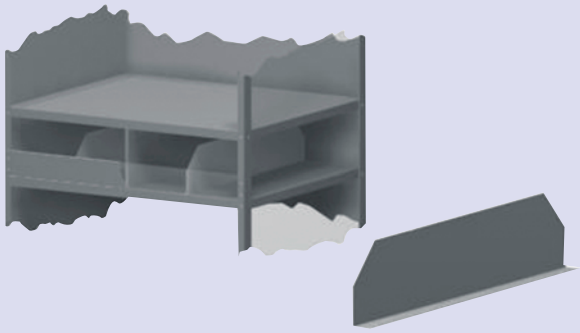

Angle Type Bin Divider

Made from 16-gauge steel, with matching holes in bottom flange for securing to shelf bin divider holes with bolts or self-inserting clips, for division of shelf openings into smaller compartments.

STOCK NO.	WEIGHT (LBS)	DIM. (D/H)	PRICE
SHV5047 □□	1.0	12" x 4"	▼
SHV5048 □□	1.3	15" x 4"	▼
SHV5049 □□	1.6	18" x 4"	▼

Storage Drawers

Made from 20-gauge steel with combined pull handle/label holders for 1½" x 3" cards. Each drawer has slots for dividers on 1" centers and stops to prevent drawers from falling when fully extended. Note: Two flush bars per shelf are recommended at shelf ends for all drawers to prevent drawers catching behind upright.

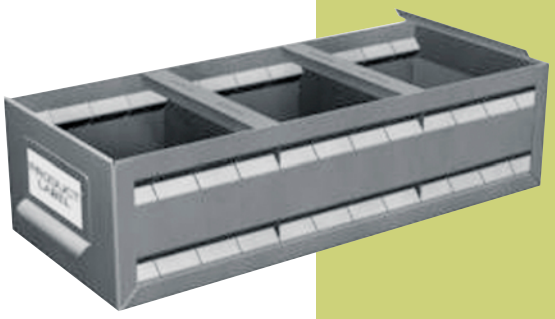

Drawers

STOCK NO.	DESCRIPTION	WEIGHT (LBS)	DIM. (D/W/H)	PRICE
SHV5050 ☐☐	Storage Drawer w/2 Dividers	4.6	5 7/16" x 17¼" x 42 29/32"	▼
SHV5053 ☐☐	Storage Drawer w/2 Dividers	4.0	5 7/16" x 11¼" x 42 29/32"	▼
SHV5056 ☐☐	Storage Drawer w/2 Dividers	8.0	11⅛" x 17¼" x 42 29/32"	▼
SHV5057 ☐☐	Storage Drawer w/2 Dividers	8.0	11⅛" x 11¼" x 42 29/32"	▼

Drawer Dividers

Drawers have two dividers each, for use in 36" wide shelving units with depths of either 12" or 18". Inserts are made of 22-gauge steel, are adjustable on 1" centers, and accommodate label inserts 1 1/32" high.

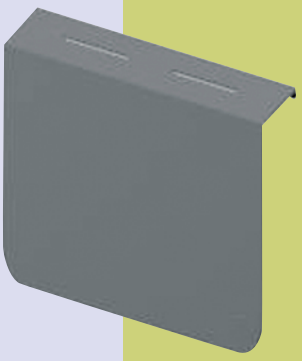

Storage Drawer Divider

STOCK NO.	DESCRIPTION	WEIGHT (LBS)	DIM. (W/H)	PRICE
SHV5055 ☐☐	Divider Only	0.2	5 7/16" x 42 29/32"	▼
SHV5058 ☐☐	Divider Only	1.0	11⅛" x 42 29/32"	▼

18-Drawer and 24-Drawer Inserts

Overall dimensions are 10¾"H x 33⅝"W for use in shelving units 36" wide. Made for 12" and 18" shelf depths, drawers have two dividers each, adjustable on 1" centers, and accommodate label inserts 11/32" high. Drawers are designed to prevent falling when fully extended.

Multi-Drawer Inserts

STOCK NO.	DESCRIPTION	WEIGHT (LBS)	DIM. (W/H)	PRICE
SHV5078 ☐☐	18 Drawer Insert for 12" deep shelf	80	10¾" x 33⅝"	▼
SHV5079 ☐☐	Divider Only	0.4	5" x 2"	▼
SHV5080 ☐☐	18 Drawer Insert for 18" deep shelf	110	10¾" x 33⅝"	▼
SHV5082 ☐☐	24 Drawer Insert for 18" deep shelf	120	10¾" x 33⅝"	▼
SHV5083 ☐☐	Divider Only	0.1	3" x 2"	▼
SHV5084 ☐☐	24 Drawer Insert for 12" deep shelf	90	10¾" x 33⅝"	▼

E-Z-LOCK WAREHOUSE SHELVING

The bigger the storage job, the better the reason to turn to UNICOR wide-span shelving — the answer for storing large, odd-sized, or bulky loads. Perfect for manual or automatic loading (except fork truck loading), these units come in a wide variety of sizes and shelf capacities, and snap together easily with no extra bracing required. Open on sides and back for maximum access

LOAD CAPACITY

STANDARD DUTY UNIT (7′ high) load capacity starts at 430 lbs. for a 48″ x 24″ size unit and progresses up to 900 lbs. for a 96″ x 48″ unit.

HIGH-CAPACITY BULK UNIT (7′ high) load capacity starts at 700 lbs. for a 48″ x 24″ size unit and extends up to 1,330 lbs. for a 96″ x 48″ unit.

Load data are for static vertical loads in pounds and are based upon utilization of 5/8″ particle board decking.

E-Z-Lock Standard Units

Using E-Z-Lock's snap-together assembly, standard units provide sturdy, organized shelving at an affordable price. A variety of sizes and capacities offers versatile light and medium-duty storage in commercial and industrial applications. Shelves are easily adjusted in 2″ increments to accommodate nearly any size load.

E-Z-Lock High-Capacity Bulk Shelving Units

When extra capacity is needed, upgrade to High-Capacity Shelves, which can carry up to two-and-one-half times the shelf load of regular bulk units. Extra shelves can be added to high-capacity bulk units for additional storage area and capacity. (Actual decking is not included.) Recommend ⅝″ particle board or ½″ marine plywood.

1 — Select a finish color.

2 — Place 2-digit color code at end of stock no.

Parchment	08
Black	27
Sand	28
Dove Gray	29
Lt. Gray	53

Additional colors may be available. Please call (202) 305-3424 for more information.

E-Z-Lock Standard Units

	WITHOUT Particle Board						WITH Particle Board					
DIM. (W/D/H)	STOCK NO.	STARTER LBS.	PRICE	STOCK NO.	ADD-ON LBS.	PRICE	STOCK NO.	STARTER LBS.	PRICE	STOCK NO.	ADD-ON LBS.	PRICE
4-SHELF UNITS												
36" x 12" x 84"	US2100 □□	41	▼	US2101 □□	36	▼	US2100PB □□	70	▼	US2101PB □□	65	▼
36" x 18" x 84"	US2102 □□	44	▼	US2103 □□	38	▼	US2102PB □□	88	▼	US2103PB □□	82	▼
36" x 24" x 84"	US2104 □□	48	▼	US2105 □□	39	▼	US2104PB □□	106	▼	US2105PB □□	97	▼
48" x 12" x 84"	US2106 □□	47	▼	US2107 □□	42	▼	US2106PB □□	86	▼	US2107PB □□	81	▼
48" x 18" x 84"	US2108 □□	51	▼	US2109 □□	44	▼	US2108PB □□	109	▼	US2109PB □□	102	▼
48" x 24" x 84"	US2110 □□	54	▼	US2111 □□	45	▼	US2110PB □□	131	▼	US2111PB □□	122	▼

E-Z-Lock Standard Units

	WITHOUT Particle Board						WITH Particle Board					
DIM. (W/D/H)	STOCK NO.	STARTER LBS.	PRICE	STOCK NO.	ADD-ON LBS.	PRICE	STOCK NO.	STARTER LBS.	PRICE	STOCK NO.	ADD-ON LBS.	PRICE
5-SHELF UNITS												
36" x 12" x 84"	US2112 □□	44	▼	US2113 □□	39	▼	US2112PB □□	80	▼	US2113PB □□	75	▼
36" x 18" x 84"	US2114 □□	47	▼	US2115 □□	41	▼	US2114PB □□	101	▼	US2115PB □□	95	▼
36" x 24" x 84"	US2116 □□	50	▼	US2117 □□	42	▼	US2116PB □□	122	▼	US2117PB □□	114	▼
48" x 12" x 84"	US2118 □□	52	▼	US2119 □□	46	▼	US2118PB □□	100	▼	US2119PB □□	94	▼
48" x 18" x 84"	US2120 □□	55	▼	US2121 □□	48	▼	US2120PB □□	127	▼	US2121PB □□	120	▼
48" x 24" x 84"	US2122 □□	58	▼	US2123 □□	49	▼	US2122PB □□	154	▼	US2123PB □□	145	▼
6-SHELF UNITS												
36" x 12" x 84"	US2124 □□	47	▼	US2125 □□	42	▼	US2124PB □□	91	▼	US2125PB □□	86	▼
36" x 18" x 84"	US2126 □□	50	▼	US2127 □□	44	▼	US2126PB □□	115	▼	US2127PB □□	109	▼
36" x 24" x 84"	US2128 □□	53	▼	US2129 □□	45	▼	US2128PB □□	140	▼	US2129PB □□	132	▼
48" x 12" x 84"	US2130 □□	56	▼	US2131 □□	50	▼	US2130PB □□	114	▼	US2131PB □□	100	▼
48" x 18" x 84"	US2132 □□	59	▼	US2133 □□	52	▼	US2132PB □□	146	▼	US2133PB □□	139	▼
48" x 24" x 84"	US2134 □□	62	▼	US2135 □□	53	▼	US2134PB □□	178	▼	US2135PB □□	169	▼
7-SHELF UNITS												
36" x 12" x 84"	US2136 □□	50	▼	US2137 □□	45	▼	US2136PB □□	101	▼	US2137PB □□	96	▼
36" x 18" x 84"	US2138 □□	53	▼	US2139 □□	47	▼	US2138PB □□	129	▼	US2139PB □□	123	▼
36" x 24" x 84"	US2140 □□	56	▼	US2141 □□	48	▼	US2140PB □□	157	▼	US2141PB □□	149	▼
48" x 12" x 84"	US2142 □□	60	▼	US2143 □□	54	▼	US2142PB □□	128	▼	US2143PB □□	122	▼
48" x 18" x 84"	US2144 □□	63	▼	US2145 □□	56	▼	US2144PB □□	164	▼	US2145PB □□	157	▼
48" x 24" x 84"	US2146 □□	66	▼	US2147 □□	57	▼	US2146PB □□	201	▼	US2147PB □□	192	▼

LOAD CAPACITY

STANDARD DUTY UNIT (7′ high) load capacity starts at 430 lbs. for a 48″ x 24″ size unit and progresses up to 900 lbs. for a 96″ x 48″ unit.

HIGH-CAPACITY BULK UNIT (7′ high) load capacity starts at 700 lbs. for a 48″ x 24″ size unit and extends up to 1,330 lbs. for a 96″ x 48″ unit.

Load data are for static vertical loads in pounds and are based upon utilization of 5/8″ particle board decking.

1. Select a finish color.
2. Place 2-digit color code at end of stock no.

Parchment	08
Black	27
Sand	28
Dove Gray	29
Lt. Gray	53

Additional colors may be available. Please call (202) 305-3424 for more information.

E-Z-Lock Bulk Storage Units

E-Z-Lock bulk storage units have greater shelf areas than standard units, making them ideal for storing large or odd-sized items. The wide range of shelf sizes and capacities combined with the option of adding extra shelves allow you to design the bulk shelving system that best accommodates your needs.

LOAD CAPACITY

STANDARD DUTY UNIT (7′ high) load capacity starts at 430 lbs. for a 48″ x 24″ size unit and progresses up to 900 lbs. for a 96″ x 48″ unit.

HIGH-CAPACITY BULK UNIT (7′ high) load capacity starts at 700 lbs. for a 48″ x 24″ size unit and extends up to 1,330 lbs. for a 96″ x 48″ unit.

Load data are for static vertical loads in pounds and are based upon utilization of 5/8″ particle board decking.

1. Select a finish color.
2. Place 2-digit color code at end of stock no.

Parchment	08
Black	27
Sand	28
Dove Gray	29
Lt. Gray	53

Additional colors may be available. Please call (202) 305-3424 for more information.

E-Z-Lock Bulk Storage Units

	WITHOUT Particle Board						WITH Particle Board					
DIM. (W/D/H)	STOCK NO.	STARTER LBS.	PRICE	STOCK NO.	ADD-ON LBS.	PRICE	STOCK NO.	STARTER LBS.	PRICE	STOCK NO.	ADD-ON LBS.	PRICE
3-SHELF UNITS												
48" x 18" x 84"	US2200 □□	53	▼	US2201 □□	51	▼	US2200PB □□	97	▼	US2201PB □□	95	▼
48" x 24" x 84"	US2202 □□	57	▼	US2203 □□	55	▼	US2202PB □□	115	▼	US2203PB □□	113	▼
48" x 36" x 84"	US2204 □□	70	▼	US2205 □□	68	▼	US2204PB □□	157	▼	US2205PB □□	155	▼
48" x 48" x 84"	US2206 □□	80	▼	US2207 □□	77	▼	US2206PB □□	187	▼	US2207PB □□	184	▼
60" x 18" x 84"	US2208 □□	59	▼	US2209 □□	57	▼	US2208PB □□	113	▼	US2209PB □□	111	▼
60" x 24" x 84"	US2210 □□	67	▼	US2211 □□	64	▼	US2210PB □□	139	▼	US2211PB □□	136	▼
60" x 36" x 84"	US2212 □□	76	▼	US2213 □□	74	▼	US2212PB □□	184	▼	US2213PB □□	182	▼
60" x 48" x 84"	US2214 □□	86	▼	US2215 □□	83	▼	US2214PB □□	195	▼	US2215PB □□	193	▼
3-SHELF UNITS												
72" x 18" x 84"	US2216 □□	68	▼	US2217 □□	66	▼	US2216PB □□	133	▼	US2217PB □□	131	▼
72" x 24" x 84"	US2218 □□	73	▼	US2219 □□	71	▼	US2218PB □□	160	▼	US2219PB □□	158	▼
72" x 36" x 84"	US2220 □□	83	▼	US2221 □□	80	▼	US2220PB □□	213	▼	US2221PB □□	210	▼
72" x 48" x 84"	US2222 □□	92	▼	US2223 □□	90	▼	US2222PB □□	265	▼	US2223PB □□	263	▼
96" x 18" x 84"	US2224 □□	86	▼	US2225 □□	84	▼	US2224PB □□	173	▼	US2225PB □□	171	▼
96" x 24" x 84"	US2226 □□	93	▼	US2227 □□	90	▼	US2226PB □□	209	▼	US2227PB □□	206	▼
96" x 36" x 84"	US2228 □□	105	▼	US2229 □□	103	▼	US2228PB □□	278	▼	US2229PB □□	276	▼
96" x 48" x 84"	US2230 □□	118	▼	US2231 □□	116	▼	US2230PB □□	349	▼	US2231PB □□	347	▼

E-Z-Lock Bulk Storage Units

4-SHELF UNITS

DIM. (W/D/H)	WITHOUT Particle Board STOCK NO.	STARTER LBS.	PRICE	STOCK NO.	ADD-ON LBS.	PRICE	WITH Particle Board STOCK NO.	STARTER LBS.	PRICE	STOCK NO.	ADD-ON LBS.	PRICE
48" x 18" x 84"	US2500 □□	65	▼	US2501 □□	62	▼	US2500PB □□	123	▼	US2501PB □□	120	▼
48" x 24" x 84"	US2502 □□	70	▼	US2503 □□	68	▼	US2502PB □□	147	▼	US2503PB □□	145	▼
48" x 36" x 84"	US2504 □□	88	▼	US2505 □□	85	▼	US2504PB □□	204	▼	US2505PB □□	201	▼
48" x 48" x 84"	US2506 □□	100	▼	US2507 □□	98	▼	US2506PB □□	242	▼	US2507PB □□	240	▼
60" x 18" x 84"	US2508 □□	73	▼	US2509 □□	71	▼	US2508PB □□	145	▼	US2509PB □□	143	▼
60" x 24" x 84"	US2510 □□	83	▼	US2511 □□	81	▼	US2510PB □□	179	▼	US2511PB □□	177	▼
60" x 36" x 84"	US2512 □□	96	▼	US2513 □□	94	▼	US2512PB □□	240	▼	US2513PB □□	238	▼
60" x 48" x 84"	US2514 □□	109	▼	US2515 □□	106	▼	US2514PB □□	301	▼	US2515PB □□	298	▼
72" x 18" x 84"	US2516 □□	85	▼	US2517 □□	83	▼	US2516PB □□	172	▼	US2517PB □□	170	▼
72" x 24" x 84"	US2518 □□	92	▼	US2519 □□	89	▼	US2518PB □□	200	▼	US2519PB □□	205	▼
72" x 36" x 84"	US2520 □□	104	▼	US2521 □□	102	▼	US2520PB □□	277	▼	US2521PB □□	275	▼
72" x 48" x 84"	US2522 □□	117	▼	US2523 □□	114	▼	US2522PB □□	348	▼	US2523PB □□	345	▼
96" x 18" x 84"	US2524 □□	109	▼	US2525 □□	107	▼	US2524PB □□	225	▼	US2525PB □□	223	▼
96" x 24" x 84"	US2526 □□	118	▼	US2527 □□	115	▼	US2526PB □□	272	▼	US2527PB □□	269	▼
96" x 36" x 84"	US2528 □□	135	▼	US2529 □□	132	▼	US2528PB □□	366	▼	US2529PB □□	363	▼
96" x 48" x 84"	US2530 □□	152	▼	US2531 □□	149	▼	US2530PB □□	460	▼	US2531PB □□	457	▼

1 Select a finish color.

2 Place 2-digit color code at end of stock no.

Parchment	08
Black	27
Sand	28
Dove Gray	29
Lt. Gray	53

Additional colors may be available. Please call (202) 305-3424 for more information.

E-Z-Lock Archive Storage Units

E-Z-Lock archive storage units provide high density storage of standard 12′ x 15″ x 10″ document boxes. Units hold 20 boxes per shelf.

Archive storage units with angle track deck system are also available. For further information, please call 202 305-3424 or 405 262-4875 ext. 391.

E-Z-Lock Archive Storage Units

DIM. (W/D/H)	STOCK NO.	STARTER LBS.	PRICE	STOCK NO.	ADD-ON LBS.	PRICE
69" x 30" x 84"	US2300 □□	107	▼	US2301 □□	105	▼
69" x 30" x 168"	US2304 □□	206	▼	US2305 □□	195	▼
69" x 30" x 192"	US2306 □□	236	▼	US2307 □□	223	▼

CAFÉ TABLES

UNICOR makes these table and seating combinations with durability, flexibility, and beauty in mind. They're constructed with sturdy metal frames in your choice of bolt-down legs for permanent attachment to the floor or adjustable glide models, featuring chrome-plated glides with nylon pads for smooth nonscratch movement. Tabletops are made of thick, high-grade particle board permanently bonded with high-pressure laminate. The fiberglass seating is designed for years of easy-care maintenance and is available in your choice of flat disc style or molded highback shells. The choice is yours: You decide the table size, leg style, and chair style you prefer. Then choose the color metal frame you want, as well as the tabletop laminate shade. The wide range of seating colors gives you the opportunity either to brighten dining and lounge areas with vivid colors or create a relaxed atmosphere with neutrals.

How to Build a Model Number for Cafe´ Tables:

A — Select a fiberglass seat color.

Dove Gray
G

Black
B

Sand
S

B — Select a laminate finish.

Lt. Oak
L

Dove Gray
G

two-person high-back café table

Two-Seat Adjustable Glide Model

STOCK NO.	DESCRIPTION	DIM. (W/D)	WEIGHT (LBS)	PRICE
FS3036GD2 □□	Café Table, Disk Seat	30" X 36"		▼
FS3036GH2 □□	Café Table, High Back Seat	30" X 36"		▼

A B

Two-Seat Bolt-Down Model

STOCK NO.	DESCRIPTION	DIM. (W/D)	WEIGHT (LBS)	PRICE
FS3036BD2 □□	Café Table, Disk Seat	30" X 36"		▼
FS3036BH2 □□	Café Table, High Back Seat	30" X 36"		▼

A B

four-person high-back café table with adustable glides

Four-Seat Adjustable Glide Model

STOCK NO.	DESCRIPTION	DIM. (W/D)	WEIGHT (LBS)	PRICE
FS4836GD4 □□	Café Table, Disk Seat	48" X 36"		▼
FS4836GH4 □□	Café Table, High Back Seat	48" X 36"		▼
FS3636GD4 □□	Café Table, Disk Seat	36" x 36"		▼
FS3636GH4 □□	Café Table, High Back Seat	36" X 36"		▼

A B

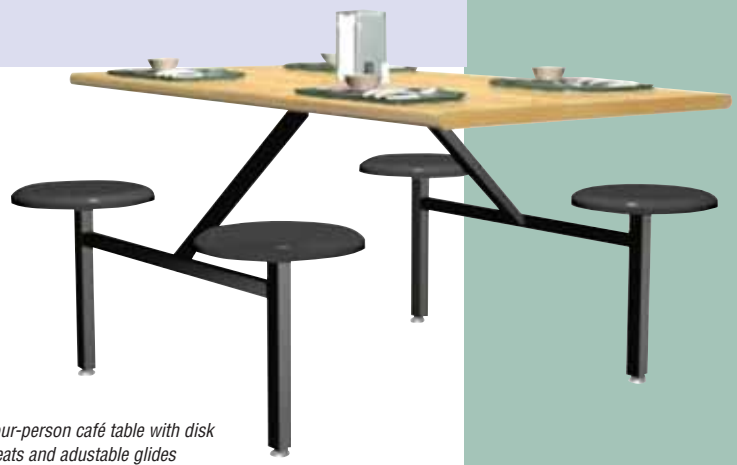

four-person café table with disk seats and adustable glides

Four-Seat Bolt-Down Model *(not shown)*

STOCK NO.	DESCRIPTION	DIM. (W/D)	WEIGHT (LBS)	PRICE
FS4836BD4 □□	Café Table, Disk Seat	48" x 36"		▼
FS4836BH4 □□	Café Table, High Back Seat	48" X 36"		▼
FS3636BD4 □□	Café Table, Disk Seat	36" x 36"		▼
FS3636BH4 □□	Café Table, High Back Seat	36" X 36"		▼

A B

Six-Seat Adjustable Glide Model *(not shown)*

STOCK NO.	DESCRIPTION	DIM. (W/D)	WEIGHT (LBS)	PRICE
FS7236GD6 □□	Café Table, Disk Seat	72" X 36"		▼

A B

Six-Seat Bolt-Down Model *(not shown)*

STOCK NO.	DESCRIPTION	DIM. (W/D)	WEIGHT (LBS)	PRICE
FS7236BD6 □□	Café Table, Disk Seat	72" X 36"		▼

A B

Four-Seat Bolt-Down Model with Game Table Top

STOCK NO.	DESCRIPTION	DIM. (W/D)	WEIGHT (LBS)	PRICE
GT3636BH4BZZZ	Game Table, Disk Seat, Black	36" x 36"		▼
GT3636BH4GZZZ	Game Table, Disk Seat, Gray	36" x 36"		▼
GT3636BH4SZZZ	Game Table, Disk Seat, Sand	36" x 36"		▼

game table with disk seats, black

TABLES

UNICOR brings you tables that are tops in form and function. A choice of laminate tops are available to beautifully complement any surrounding. Quality craftsmanship and attention to detail set these tables apart from the crowd. Ample surface space lets you work or play in comfort. With UNICOR, you not only get an excellent product and value, but you get a company that caters to your needs. Table base color is black; other colors available by special order.

AVAILABLE GOVERNMENT LOGOS*

Marine seal, Army seal, Coast Guard seal, Navy seal, Air Force seal, and the Bureau of Prisons seal

A — Select a Logo code.

M - Marine

N - Navy

A - Army

F - Air Force

C - Coast Guard

B - Bureau of Prisons

* If we do not have the logo, there is a one-time $300 set-up charge to add new logos.

* Minimum order of six.

Logo Table

Logo tables are unique tables that can display your organization's seal embossed on a 24" or 30" diameter wooden top. Be proud and display your organization's seal. The standard seals are: Navy, Marine, Army, BOP, Coast Guard, and Air Force. Seals can be custom made per your specifications at an additional first-run cost.

STOCK NO.	DIM. (DIAMETER)	PRICE
LTBR24 ☐	24"	▼
LTBR30 ☐	30"	▼
LTBR36 ☐	36"	▼
LTBR42 ☐	42"	▼
LTBR48 ☐	48"	▼

A

**Add the one letter LOGO code to the end of your table selection. The base is standard black.*

Contemporary Table

This functional and stylish table comes with a walnut laminate top and a center drawer. The legs have a satin chrome finish and adjustable glide feet. Drawer size: 23¾"W x 2"D x 24½"L

STOCK NO.	DIM. (W/D/H)	PRICE
7110001130507	30" x 60" x 29½", Black	▼
7110001130509	30" x 60" x 29½", Parchment	

WORK BENCHES

UNICOR modular work benches offer the stability of a rock-solid work surface with the addition of secure storage below for tools, instruments, or other essentials. A great feature is the flexibility with which they can be configured. For more information on configuration and custom applications, contact our technical representative at 202 305-3424.

Basic Work Bench - Configuration and Accessories

Select to the height you need or customize to any application with the addition of accessories. Leg adjustments, height adjustment sleeve, floor plate, height adjustment sleeve with caster base, rigid caster, swivel caster with brake, back/end stops. Risers, bottom shelves, drawer with sliding tray, drawer, mounting angle, drawer lock with spring bolt, dead bolt, or master key are available. Contact a technical representative at 202 305-3424 for assistance.

PLATFORM-TOPPED WORK BENCHES

Steel-only tabletop materials are used, and you can accessorize with drawers, back and end stops, risers, lower shelf, or electrical outlet strips. Then choose a leg design: fixed or adjustable, in the basic height you require. Adjustable legs range from 30" to 36" high, and adjust on 1" centers. Legs are pre-punched for tabletop, horizontal stringer (stabilizer), floor anchoring, and shelf attachments, and have knockouts for electrical outlets.

configuration A

Work Bench Configuration A

Units include legs, steel top, and stringer.

STOCK NO.	W	D	H	WEIGHT (LBS)	PRICE
RWB4509 ☐☐	60"	28"	28¼"	88	▼
RWB4513 ☐☐	60"	34"	28¼"	102	▼
RWB4517 ☐☐	60"	28"	32¼"	90	▼
RWB4521 ☐☐	60"	34"	32¼"	103	▼
RWB4525 ☐☐	72"	28"	28¼"	101	▼
RWB4529 ☐☐	72"	34"	28¼"	117	▼
RWB4533 ☐☐	72"	28"	32¼"	103	▼
RWB4537 ☐☐	72"	34"	32¼"	119	▼

configuration B

Work Bench Configuration B

Units include legs, steel top, stringer, shelf, one drawer, and back/end stops.

STOCK NO.	W	D	H	WEIGHT (LBS)	PRICE
RWB4605 ☐☐	60"	28"	28¼"	133	▼
RWB4609 ☐☐	60"	34"	28¼"	148	▼
RWB4613 ☐☐	60"	28"	32¼"	134	▼
RWB4617 ☐☐	60"	34"	32¼"	152	▼
RWB4621 ☐☐	72"	28"	28¼"	150	▼
RWB4625 ☐☐	72"	34"	28¼"	167	▼
RWB4629 ☐☐	72"	28"	32¼"	151	▼
RWB4633 ☐☐	72"	34"	32¼"	168	▼

configuration C

Work Bench Configuration C

Units include legs, steel top, stringer, shelf, two drawers, back/end stops, and riser.

STOCK NO.	W	D	H	WEIGHT (LBS)	PRICE
RWB4701 ☐☐	60"	28"	28¼"	174	▼
RWB4705 ☐☐	60"	34"	28¼"	189	▼
RWB4709 ☐☐	60"	28"	32¼"	175	▼
RWB4713 ☐☐	60"	34"	32¼"	191	▼
RWB4717 ☐☐	72"	28"	28¼"	193	▼
RWB4721 ☐☐	72"	28"	28¼"	211	▼
RWB4725 ☐☐	72"	28"	32¼"	195	▼
RWB4729 ☐☐	72"	34"	32¼"	213	▼

1 — Select a finish color.

2 — Place 2-digit color code at end of stock no.

Parchment	08
Black	27
Sand	28
Dove Gray	29
Lt. Gray	53

Additional colors may be available. Please call (202) 305-3424 for more information.

INDUSTRIAL STACKING RACKS

Pallet stacking racks stack together for instant forklift- ready storage, then nest neatly together when unneeded, taking up very little floor space. Wood pallets can be forked right on the racks or the entire rack can be used as a pallet. Available in 13 models in 3000-lb. and 4000-lb. load capacities, the units are made of tube steel in a rigid post and brace structure that provides maximum strength with maximum weight. Color coding identifies size and load capacity. Ideal for supply depot operations and food storage facilities.

Blue

Orange

Green

Yellow

Beige

Brown

Dove Gray

stacking racks

Stacking Racks

STOCK NO.	DESCRIPTION	DIM. (W/D/H)	PRICE
3990012276000	Rack, Stack, 3K, Blue	53" x 48" x 48"	▼
3990012276001	Rack, Stack, 3K, Orange	53" x 48" x 42"	▼
3990012276003	Rack, Stack, 3K, Yellow	53" x 42" x 42"	▼
3990012625955	Rack, Stack, 3K, Beige	53" x 42" x 48"	▼
3990012276002	Rack, Stack, 4K, Green	53" x 48" x 54"	▼

STOCK NO.	DESCRIPTION	DIM. (W/D/H)	PRICE
3990013134497	Rack, Stack, 4K, Green	64" x 64" x 48"	▼
3990013146004	Rack, Stack, 3K, Gray	53" x 48" x 64"	▼
3990013152782	Rack, Stack, 4K, Brown	48" x 48" x 54"	▼
3990013152783	Rack, Stack, 4K, Yellow	60" x 60" x 42"	▼
3990013152784	Rack, Stack, 3K, Orange	72" x 48" x 48"	▼
3990013152785	Rack, Stack, 4K, Gray	53" x 48" x 64"	▼
3990013152786	Rack, Stack, 4K, Orange	53" x 48" x 72"	▼
3990013531115	Rack, Stack, 3K, Green	72" x 60" x 60"	▼

nested stacking racks

3K = 3,000-lb. load capacity
4K = 4,000-lb. load capacity

Tire Rack

Stacking tire racks enable you to store tires quickly with a forklift. Racks are manufactured using 2" square 14-gauge tubes. Sizes vary. Rack bases can be manufactured to meet your storage application.

Call our technical representative at 202 305-3424 or 405 262-4875 ext. 370.

1 Select a finish color.

2 Place 2-digit color code at end of stock no.

Parchment
08

Lt. Gray
53

Orange
03

Additional colors may be available. Please call (202) 305-3424 for more information.

Tire Racks: Base

STOCK NO.	DESCRIPTION	DIM. (W/D)	PRICE
BASETIREDS46 □□	Base, Tire, Double Row	6' x 4'	▼
BASETIRESS356 □□	Base, Tire, Single Row	6' x 3.5'	▼
BASETIRESS36 □□	Base, Tire, Single Row	6' x 3'	▼
BASETIRESS46 □□	Base, Tire, Single Row	6' x 4'	▼

Tire Racks: Post

STOCK NO.	DESCRIPTION	DIM. (L)	PRICE
POSTTIRE33 □□	Post, Tire	33"	▼
POSTTIRE57 □□	Post, Tire	57"	▼
POSTTIRE45 □□	Post, Tire	45"	▼

FOOD SERVICE

UNICOR manufactures a complete line of very high-quality food service equipment, using high grade stainless steel for greater durability and a longer work life without rusting.

PREP TABLES

Square Edge Food Prep Table

6-foot-long all stainless steel table ideal for virtually any food preparation job. Features heavy-duty 14-gauge top supported by sturdy 16-gauge tube legs with adjustable bullet feet. Comes with a removable, stainless, two-piece, 16-gauge undershelf.

STOCK NO.	TABLE DIM. (W/L/H)	PACKAGE DIM. (W/L/H)	WEIGHT (LBS)	CUBE*	PRICE
7320 00 269 9231	30" x 72" x 36"	32" x 74" x 6"	166	8.3	▼
7320 00 269 9232*	30" x 96" x 36"	32" x 98" x 6"	201	10.9	▼

**Also available as an 8-foot long table.*

Shipped unassembled.

FIRST-RATE QUALITY

Most stainless steel food service equipment is tig-welded for sturdy construction and ease of cleaning. Under the National Sanitary Foundation standard #2, UNICOR is a certified custom builder. All products are warranted to meet the high quality standards of Military and Federal specifications.

Food Prep Table with Plastic Top

Removable 3⁄4" polyethylene top facilitates cleaning. A removable undershelf makes for all-purpose utility. Both legs and undershelf are made of 16-gauge stainless steel.

STOCK NO.	TABLE DIM. (W/L/H)	PACKAGE DIM. (W/L/H)	WEIGHT (LBS)	CUBE*	PRICE
7320 00 985 7339	36" x 72" x 30"	38" x 74" x 12"	201	19.5	▼

Shipped unassembled.

Food Prep Table with Rolled Rim

14-gauge stainless steel table features 1½" rolled down flange along its rim plus a convenient undershelf for storage. Sturdy tube legs have adjustable bullet feet.

STOCK NO.	TABLE DIM. (W/L/H)	PACKAGE DIM. (W/L/H)	WEIGHT (LBS)	CUBE*	PRICE
7320 00 927 7462	30" x 72" x 35"	31" x 73" x 6"	200	7.3	▼
7320 00 927 7463*	30" x 72" x 35"	31" x 73" x 6"	220	7.9	▼

**Also available with heavy-duty 5" swivel casters with brakes and rolling bumpers to provide mobility while protecting walls, equipment, and fixtures.*

Shipped unassembled.

Utility Table with Tube Shelf

Sturdy, 6-foot-long. all-purpose stainless steel table accommodates two workers and a wide range of applications, from kneading dough to trimming meat. Durable tube frame features a 16-gauge tubular undershelf, 5" heavy-duty casters with brakes, and rolling bumpers that prevent wall and sideboard damage.

STOCK NO.	TABLE DIM. (W/L/H)	PACKAGE DIM. (W/L/H)	WEIGHT (LBS)	CUBE*	PRICE
7320 01 236 6920	36" x 72" x 36"	38" x 74" x 42"	261	68.4	▼
7320 01 236 6929*	36" x 72" x 36"	38" x 74" x 42"	275	68.4	▼

**Also available in a solid undershelf version ideal for storing large pots and pans or bulky foods.*

Shipped fully assembled.

Cutting Table with Tube Shelf

Easy-to-clean, stainless steel, 6-foot table with tubular undershelf for cutting meat, fish, fowl, or vegetables. Top surface features a 4" high, rolled rim splash guard on three sides to prevent spillage. Heavy-duty 5" casters with brakes and rolling bumpers provide mobility while protecting walls, equipment, and fixtures.

STOCK NO.	TABLE DIM. (W/L/H)	PACKAGE DIM. (W/L/H)	WEIGHT (LBS)	CUBE*	PRICE
7320 01 236 6919	36" x 72" x 36"	38" x 74" x 46"	306	74.9	▼
7320 01 236 6918*	36" x 72" x 36"	38" x 74" x 46"	306	74.9	▼

**Also available in a solid undershelf version ideal for storing large pots and pans or bulky foods.*

Shipped unassembled.

Food Prep Table with Marine Edge and Drawer

Heavy-duty stainless steel table with ½" raised edge all around to prevent spillage. Includes stainless steel undershelf and drawer with removable pan. 5" swivel casters with brakes and rolling bumpers provide mobility and protect walls and sideboards.

STOCK NO.	TABLE DIM. (W/L/H)	PACKAGE DIM. (W/L/H)	WEIGHT (LBS)	CUBE*	PRICE
7320 41 483 2019	36" x 72" x 30"	30" x 74" x 9"	225	11.3	▼

Shipped unassembled.

PREP TABLES

Table with Upper Shelf and Cutting Boards

Designed to satisfy a host of needs, this super- heavy-duty table is the ideal workstation in the kitchen or bakery. The rear half of the work surface is 14-gauge stainless steel and the front half accommodates two removable (36" x 18") polyethylene cutting boards. Elevated 19" above the work surface is a 14-gauge stainless steel shelf (10" x 72") with an 8" high backsplash. Handy upper shelf serves as condiment, utensil, and food storage, or for cooling breads and dishes hot from the oven. Table includes a two-piece removable undershelf and legs with adjustable bullet feet.

STOCK NO.	TABLE DIM. (W/L/H)	PACKAGE DIM. (W/L/H)	WEIGHT (LBS)	CUBE*	PRICE
7320 00 042 7131	36" x 72" x 36" (63"H with upper shelf)	37" x 73" x 4"	240	65.7	▼
7320 00 019 0627*	36" x 72" x 36" (50"H with backsplash)	37" x 73" x 42"	270	65.7	▼
7320 00 042 7129**	36" x 72" x 36"	37" x 73" x 42"	240	65.7	▼

**Also available with 14" high rear backsplash.*

***Also available without upper shelf or backsplash.*

Shipped unassembled.

Four-Deck Pot and PanRack

One of our most popular items, this extra-heavy-duty, 4-shelf rack is ideal for storing large pots and pans and other bulky items. All tubular stainless steel and continuous solid-welded construction includes adjustable bullet feet for leveling on uneven floors.

STOCK NO.	TABLE DIM. (W/D/H)	PACKAGE DIM. (W/D/H)	WEIGHT (LBS)	CUBE*	PRICE
TPN 6643	72" x 26" x 64"	74" x 28" x 70"	250	83.9	▼

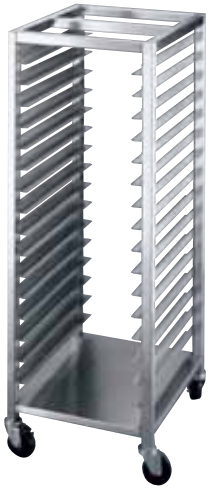

Bakery Cart

Compact, efficient cart stores a lot in a little space. Multiple tray-slides and solid bottom shelf spaced to provide easy access to 17 levels from each end of the cart. Heavy-duty 5" casters with brakes and rubber rolling bumpers for mobility and protection.

STOCK NO.	TABLE DIM. (L/D/H)	PACKAGE DIM. (L/D/H)	WEIGHT (LBS)	CUBE*	PRICE
7320 01 236 6917	21½" x 28" x 60"	23" x 66" x 30"	197	26.4	▼

Shipped unassembled.

Lineman Cart

Versatile 14-gauge stainless steel cart features two flat shelves. 4" splash guards prevent spillage. Built-in handle and 5" casters offer easy mobility from kitchen to serving line. Rubber bumpers protect walls and sideboards.

STOCK NO.	TABLE DIM. (W/L/H)	PACKAGE DIM. (W/L/H)	WEIGHT (LBS)	CUBE*	PRICE
7320 01 236 6922	28¾" x 44" x 46"	32" x 52" x 48"	140	46.3`	▼

Shipped unassembled.

Dunnage Rack

Heavy-duty 16-gauge rack stores bulk materials in refrigerators, storerooms, or food prep areas. Designed to allow for easy cleaning under the rack even when in use.

STOCK NO.	TABLE DIM. (W/L/H)	PACKAGE DIM. (W/L/H)	WEIGHT (LBS)	CUBE*	PRICE
TPN 6157	24" x 48" x 18"	26" x 50" x 24"	50	18.1	▼

Toaster and Appliance Cart

Perfect for storing and moving small portable appliances such as microwaves, slicers, and mixers. 14-gauge stainless steel construction with top and bottom shelves, heavy-duty 5" swivel casters, wheel locks, and rubber bumpers. (Appliance not included.)

STOCK NO.	TABLE DIM. (W/L/H)	PACKAGE DIM. (W/L/H)	WEIGHT (LBS)	CUBE*	PRICE
7320 01 236 6924 (cart only)	30" x 36" x 36"	32" x 38" x 42"	137	29.5	▼

Shipped unassembled.

MISCELLANEOUS

Mobile Storage Shelving

Practical and efficient, these mobile carts can be rolled in and out of coolers, freezers, and storage areas to create storage where and when needed. These sturdy, all stainless steel units are available in a variety of sizes. Heavy-duty 5" swivel casters (two with brakes) have rubber bumpers and provide quiet operation. Units meet MLL-2-40144E and GSA and DCASMA standards and specifications. Shipped unassembled, units are easily put together with simple hand tools. Instructions provided.

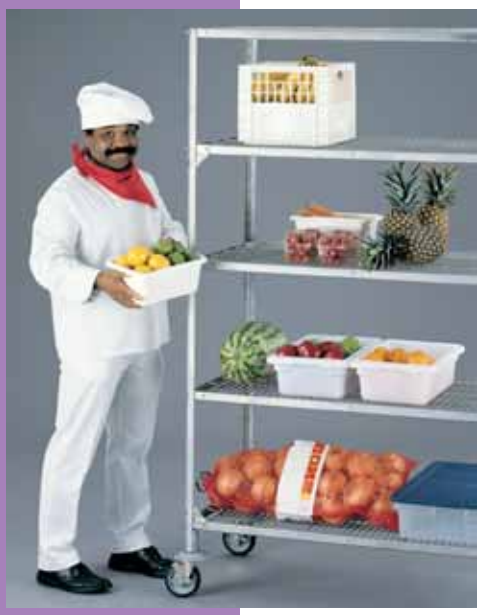

STOCK NO.	DESCRIPTION	DIM. (W/L/H)	WEIGHT (LBS)	CUBE*	PRICE
7125 00 555 2663	5 Shelves	48" x 18" x 72"	112	4.23	▼
7125 00 555 2732	5 Shelves	36" x 18" x 72"	92	3.36	▼
7125 01 010 3092	5 Shelves	30" x 18" x 72"	85	2.92	▼
7125 00 590 1768	5 Shelves	48" x 24" x 72"	137	5.51	▼
7125 01 010 3091	5 Shelves	42" x 24" x 72"	117	4.81	▼
7125 00 555 2720	5 Shelves	36" x 24" x 72"	112	4.23	▼
7125 01 010 0698	5 Shelves	30" x 24" x 72"	96	2.29	▼
7125 00 348 8028	4 Shelves	48" x 18" x 58"	97	3.73	▼
7125 00 348 8026	4 Shelves	48" x 24" x 58"	107	4.73	▼

Other sizes available upon request. *Shipped unassembled.*

Nickel-Chrome Plated Shelving Unit

This practical and economical 4-level storage shelving unit is made of nickel-chrome plated low-carbon steel. These popular shelving units are a great value and an excellent solution to a variety of storage requirements. Leg levelers adjust for use on uneven floors. Unit meets GSA and Military Standards Specifications. Shipped unassembled, unit is easily put together with simple hand tools. Instructions are included.

STOCK NO.	DIM. (W/D/H)	WEIGHT (LBS)	CUBE*	PRICE
7125 00 707 3041	48" x 15" x 58"	66	3.38	▼

Other sizes available upon request. *Shipped unassembled.*

Kettle Stir Paddle

Perfect for blending large batches of soups, gravies, stews, and other recipes requiring folding or stirring. 11-gauge, all stainless steel construction with 16-gauge tube handle. Available in paddle design that incorporates six 11/4" holes on paddle surface for ease in blending. Paddles and handles available in a variety of sizes to match customer needs.

STOCK NO.	DESCRIPTION	OVERALL LENGTH	PADDLE (L/W)	WEIGHT (LBS)	CUBE*	PRICE
TPN 9903	Without Holes	48"	14" x 6"	5	0.4	▼
TPN 9899	With Holes	48"	14" x 6"	5	0.4	▼

Other sizes available upon request. *Shipped unassembled.*

ADDITIONAL PRODUCTS

DORMITORY BEDS AND ACCESSORIES

Institutional Beds

UNICOR offers both the round and square tube bed to the marketplace. They can be used as single units, or stacked to maximize room capacity for customer requirements.

Round Tube Dormitory Bed – Bunkable

STOCK NO.	DESCRIPTION	DIM. (W/L)	GROUP	WEIGHT (LBS)	PRICE
BEDROUND7936 □□	Bed, bunk, round-tube	36" x 79"	Bed	91.5	▼
BEDROUND8436 □□	Bed, bunk, round-tube	36" x 84"	Bed	94	▼

Round Tube Bed - Accessories

STOCK NO.	DESCRIPTION	DIM. (W/L)	GROUP	WEIGHT (LBS)	PRICE
BEDCONVRND □□	Bed, conversion unit, round tube		Bed	10	▼
BEDCAPRND □□	Cap, bedpost, round tube		Bed	.25	▼
BEDGLIDERND □□	Glide, round tube		Bed	.25	▼
LADDERROUNDTUBE □□	Ladder, tube steel 15" w x 48" h	15" x 48"	Bed	10	▼

1 Select a finish color.

2 Place 2-digit color code at end of stock no.

Parchment	08
Sand	28
Lt. Gray	53

Additional colors may be available. Please call (202) 305-3424 for more information.

Round Tube Dormitory Bed with Wood Insets, Head & Foot – Bunkable

STOCK NO.	DESCRIPTION	DIM. (W/L)	GROUP	WEIGHT (LBS)	PRICE
BEDSQBTK7936 □□	Bed, Bunk, sq. tube, Burma Teak	36" x 79"	Bed	105	▼
BEDSQLCO7936 □□	Bed, Bunk, sq. tube, Lt. Carol. Oak	36" x 79"	Bed	110	▼
BEDSQPSO7936 □□	Bed, Bunk, sq. tube, Plain Sawn Oak	36" x 79"	Bed	105	▼
BEDSQWW7936 □□	Bed, Bunk, sq. tube, Win. Walnut	36" x 79"	Bed	110	▼
BEDSQBTK8436 □□	Bed, Bunk, sq. tube, Burma Teak	36" x 84"	Bed	105	▼
BEDSQLCO8436 □□	Bed, Bunk, sq. tube, Lt. Carol. Oak	36" x 84"	Bed	110	▼
BEDSQPSO8436 □□	Bed, Bunk, sq. tube, Plain Sawn Oak	36" x 84"	Bed	105	▼
BEDSQWW8436 □□	Bed, Bunk, sq. tube, Plain Sawn Oak	36" x 84"	Bed	110	▼

Square Tube Bed - Accessories

STOCK NO.	DESCRIPTION	DIM. (W/L)	GROUP	WEIGHT (LBS)	PRICE
BEDCONVSQR □□	Bed, conversion unit, square tube		Bed	10	▼
BEDCAPSQUARE □□	Cap, bedpost, square tube		Bed	.25	▼
BEDGLIDESQUARE □□	Glide, square tube		Bed	.25	▼
LADDERROUNDTUBE □□	Ladder, tube steel	15" x 48"	Bed	10	▼

SEGREGATION UNITS AND ACCESSORIES

Segregation Beds

The single segregation style bed comes fully welded. It can also receive the storage compartments and restraint loops when ordering.

Segregation Beds (Single)

STOCK NO.	DESCRIPTION	DIM. (W/L/H)	GROUP	WEIGHT (LBS)	PRICE
BEDSEGSGL27 □□	Bed, Seg. Single	27" x 80"	Bed	144	▼
BEDSEGSGL30 □□	Bed, Seg. Single	30" x 80"	Bed	154	▼
BEDSEGSGL32 □□	Bed, Seg. Single	32" x 80"	Bed	144	▼
BEDSEGSGL36 □□	Bed, Seg. Single	36" x 80"	Bed	181	▼

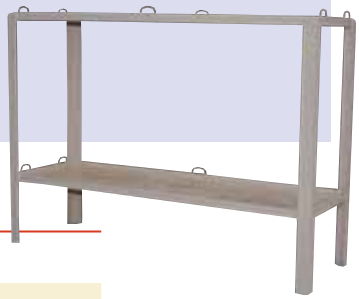

Segregation Beds (Double, Fully Assembled and Welded)

STOCK NO.	DESCRIPTION	DIM. (W/L)	GROUP	WEIGHT (LBS)	PRICE
BEDSEGDBL27 □□	Bed, Seg. Double	27" x 80"	Bed	280	▼
BEDSEGDBL30 □□	Bed, Seg. Double	30" x 80"	Bed	300	▼
BEDSEGDBL32 □□	Bed, Seg. Double	32" x 80"	Bed	315	▼
BEDSEGDBL36 □□	Bed, Seg. Double	36" x 80"	Bed	331	▼

Segregation Beds (Double, Knocked-Down, Requiring Welded On Site)

STOCK NO.	DESCRIPTION	DIM. (W/L)	GROUP	WEIGHT (LBS)	PRICE
BEDSEGDKD27 □□	Bed, Seg. Double KD	27" x 80"	Bed	280	▼
BEDSEGDKD30 □□	Bed, Seg. Double KD	30" x 80"	Bed	300	▼
BEDSEGDKD32 □□	Bed, Seg. Double KD	32" x 80"	Bed	315	▼
BEDSEGDKD36 □□	Bed, Seg. Double KD	36" x 80"	Bed	331	▼

Ladder

This bed ladder is 15" wide x 48" in height. The ladders are welded into position on the bed. Customer must specify right or left side of bed.

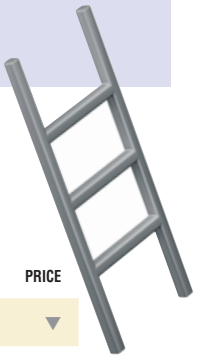

STOCK NO.	DESCRIPTION	DIM. (W/H)	GROUP	WEIGHT (LBS)	PRICE
LADDERROUNDTUBE □□	Ladder, Bunk-bed, Angle, Step	15" x 48"	Bed	10	▼

Inmate Segregation Desk

Segregation desks are built for security and durability. The desks have no removable parts and are fully welded. Specify sand or gray.

**Handicapped segregation desks are available.*

STOCK NO.	DESCRIPTION	GROUP	WEIGHT (LBS)	PRICE
DESKSEGSQ □□	Desk, Seg, Bop, Square tube	Mot	84	▼

NOTE: SEGREGATION BED SHIPPING OPTIONS

Shipping charges vary depending on the destination, optional equipment, and quantity. Shipping charges will be significantly lower if the amount of full truckloads is reduced. UNICOR, FCI El Reno offers an optional "field welded" segregation style bed. The designation for this type bed is the "knockdown" (DKD) segregation bed. This style bed requires assembly by the customer. The legs of the beds are supplied with a gusset at the necessary locations to ease the assembly process. Assembly drawings of the bed are available upon request.

1. Select a finish color.
2. Place 2-digit color code at end of stock no.

Parchment	08
Sand	27
Lt. Gray	53

additional colors may be available. Please call 202 305-3707 or 859 225-4824 for more information.

ADDITIONAL PRODUCTS

METAL LUMBER & MISCELLANEOUS

examples of finished metal lumber pieces

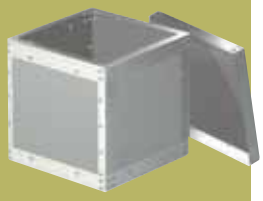

Metal Lumber

Slotted angles are the universal fasteners of metal shelving and support units. This multipurpose product can be cut, combined, and fastened together through pre-punched hole patterns into unlimited configurations for endless functions. Use for cross-aisle and down-aisle shelving, for tall package racking, hanging support for overhead doors, and more. Available in 12- and 14-gauge galvanized steel. Sold in bundles of 10 pieces with 75 bolts and nuts.

STOCK NO.	DESCRIPTION	DIMENSION (L)	PRICE
sla1210	Angle, Steel Slotted, 12ga, ty4, cl2	10.0'	▼
sla1212	Angle, Steel Slotted, 12ga, ty4, cl2	12.0'	▼
sla1215	Angle, Steel Slotted, 12ga, ty4, cl2	15.0'	▼
sla1410	Angle, Steel Slotted, 14ga, ty2, cl2	10.0'	▼
sla1412	Angle, Steel Slotted, 14ga, ty2, cl2	12.0'	▼
sla1415	Angle, Steel Slotted, 14ga, ty2, cl2	15.0'	▼

Storeroom Carts

These aluminum storeroom carts are ideal for moving large and heavy items. Featuring fully welded construction and a diamond tread deck, these carts are strong, durable, and corrosion resis-tant. Each cart comes with 6″ casters, two swivel w/brakes and two rigid. An aluminum push handle can be on either end of the cart.

STOCK NO.	DIM. (W/D)	WEIGHT (LBS)	PRICE
auc2448	24" x 48"	85	▼
auc3048	30" x 48"	100	▼
auc3060	30" x 60"	115	▼
auc3660	36" x 60"	135	▼
auc3672	36" x 72"	155	▼

Casters

Take full advantage of the versatility of slotted angles with these specially designed casters.

flat caster CAS3R

flat caster CAS4R

swivel caster CAS3S

- Attach these 3½″ and 4″ swivel casters to angles or corner gusset plates for instant mobility. In sets of four, hardware included. Each package contains 75 each of 5⁄16″ x ¾″ bolts with nuts.
- The 3½″ rigid caster is rated at 250-lb. capacity and measures 4 11⁄16″ high x 5″ long x 2½″ wide. Wheel tread is 15⁄16″ wide. Four mounting holes are 5⁄16″ diameter and spaced 13⁄16″ x 4″.
- The 4″ rigid caster is rated at 400-lb. capacity and measures 5⅛″ high x 6½″ long x 3½″ wide. Wheel tread is 1 9⁄16″ wide. Four mounting holes are ⅜″ diameter and spaced 1¾″ x 5″.
- The 3½″ swivel caster is rated at 250-lb. capacity and measures 5″ high x 4¼″ long x 3¾″ wide. Wheel tread is 15⁄16″ wide. Mounting plate is 4¼″ x 3¾″ and has four 3⁄8″ diameter x ¾″ long slots spaced 2⅝″ x 3⅛″.

Casters

STOCK NO.	DESCRIPTION	WHEEL DIM.	PLATE DIM.	PRICE
CAS3R	Caster, Flat	3½"	5" x 2½"	▼
CAS4R	Caster, Flat	4"	6½" x 3¼"	▼
CAS3S	Caster, Swivel	3½"	4¼" x 3¾"	▼

FILTRATION SERVICES

UNICOR provides a one-stop source for your total filtration needs. With many different products, we have the right solution to help you achieve and maintain the clean, quality air you want in your facility. See our website at **www.filtrationservicesinc.com** for a printable brochure.

Filter Products For Everyday Facility:

- airports ■ auditoriums ■ maintenance fac
- hospitals ■ museums ■ office buildings

Standard Capacity Air Filters Feature:

- average atmospheric efficiency of 20% - 25% (ASHRAE 52.1 1992)
- 150˚ F max. temperature
- 100% synthetic media, engineered for consistency
- Priced each. Sold in full cartons. $1,000 minimum order

Extended Surface Packet Filters

Ridgid Cell Filters

Standard & Class I Pleated Filters

UNICOR has a complete filtration program. For further details, call 920 845-5810 or 919 575-2050. To see an overview of this new product line, request catalog CATMI800.

Extended Pleated Air Filters

APPLICATIONS: Pleated air filters are widely used as pre-filters for higher efficiency filters or as final filters. When used as a pre-filter, these medium efficiency filters will add substantially to the life of the more expensive high efficiency filters. When used as a final filter, these filters will be up to 2½ times more efficient than conventional filters. The 100% synthetic pleated design offers greater dust holding capacity and longer life. Generally, the deeper the pleats, the longer the filter will last between filter changes.

CONSTRUCTION: The pleated filter pack is enclosed in a heavy-duty, moisture resistant die cut frame that will not crack, warp, or distort under normal operating conditions. The pleated media is nonwoven, 100% synthetic engineered media, reinforced with galvanized expanded metal. UL Classified as to flammability only; Class 2 (R12347).

NON-PRESCRIPTION SAFETY EYEWEAR

Industrial Spectacle with Sideshields

- Dual lens eyewear ■ Four-way directional protection from above, below, & sides
- Vectored vents for better ventilation
- A scratch resistant coating prolongs the life of the lens
- Available in 56mm and 60mm

STOCK NO.	LENS COLOR	PRICE
4240-00-516-4728	Clear	$6.25
4240-00-269-9460	Gray	$7.25

General Purpose Safety Spectacle

- Coated 100% polycarbonate wrap around unilens design
- Adjustable temple length
- Lens tints: clear, gray, and amber
- Clear lens available with solid sideshields and spatula temples
- Impact & Dust protection

STOCK NO.	FRAME COLOR	LENS COLOR	PRICE
4240-01-292-2816	Black	Clear	$4.00
4240-01-292-2817	Black	Gray	$4.50
4240-01-292-5055	Black	Amber	$4.50

ADDITIONAL PRODUCTS

NON-PRESCRIPTION SAFETY EYEWEAR

Industrial Goggle - DUST & SMALL PARTICLE PROTECTION

- Lightweight, comfortable protection
- Affordable protection for multi-purpose use
- Wrap-around styling & flexible fitting bridge provides excellent panoramic vision
- Available in perforated vent (shown) and hooded vents.

STOCK NO.	FRAME COLOR	LENS COLOR	PRICE
4240-00-052-3776	Clear	Clear	$2.25

Industrial Goggle

- Wrap-around sports style provides excellent panoramic vision
- Frosted brow guard reduces glare
- Indirect venting increases air flow
- Dust/mist/impact/chemical splash protection
- Fits over most Rx spectacles.

STOCK NO.	FRAME COLOR	LENS COLOR	PRICE
4240-01-292-2818	Clear	Clear	$6.04

Welders & Chipper Goggle

- Wide cup goggle designed to fit over some personal prescription eyewear.
- Molded of heavy duty plastic shields allow maximum ventilation
- Round 50mm flat polycarbonate lenses
- Clear lenses for chipper; filter lenses for welding applications.

STOCK NO.	FRAME COLOR	LENS COLOR	PRICE
4240-00-269-7912	Black	Clear	$6.04
4240-00-203-3804	Black	Shade 6	$6.75
4240-00-269-4418	Black	Shade 4	$6.75

Industrial Faceshield

- Recommended for general purpose use
- Crown is molded from polycarbonate and features a floating snap-lock suspension that allows easy adjustment to a wide range of head sizes
- Cushioned with an absorptive sponge-like headband for comfortable fit
- Oversized windows securely lock into place with swivel type locks to provide frontal and lateral protection
- Impact and dust protection

STOCK NO.	FRAME COLOR	LENS COLOR	PRICE
4240-00-542-2048	Black	Clear	$7.90

Welders Goggle - Shade 5 Filter

- Protects against harmful rays, sparks, and spatter generated during welding & cutting operations
- Welding helmet lenses are NOT protection against severe impact hazards (e.g. fragmenting grinding wheels or abrasive discs, explosive devices or corrosive liquids machine guards or other devices MUST be used where These hazards exist
- Impact resistant eye protection such as safety goggles or spectacles & ear protection MUST be worn when using a welding helmet.

STOCK NO.	FRAME COLOR	LENS COLOR	PRICE
4240-00-816-3819	Brown/Gray	Shade 5	$14.00

ADDITIONAL PRODUCTS

TRAFFIC SIGNS

**10 item maximum per stock number*

Traffic control signs are manufactured on engineer grade retro-reflective sheeting on aluminum stock. All signs are manufactured to federal traffic sign codes.

DESCRIPTION	SIZE	STOCK NO.	PRICE
STOP	Min. 24” Std. 30”	9905 00 721 8772 9905 00 721 8734	$48 $64
YIELD	Min. 30”	9905 00 721 8521	$64
KEEP RIGHT	Min. 18” x 24”	R4 7a 18x24RA	$38
DO NOT ENTER	Min. 30” Std. 30”	9905 00 949 5066	$64

DESCRIPTION	SIZE	STOCK NO.	PRICE
	30” x 30”	W11 9 30x30RA	$64
	30” x 30”	9905 00 721 8764	$64
NO PARKING ANY TIME	12” x 18”	9905 00 917 5725	$22
SPEED LIMIT 35	12” x 18”	9905 01 074 9412	$38

To see the full line of traffic signs available through UNICOR, request catalog CATMG1401.

To see modular interior and exterior facility signage offered through UNICOR, request catalog catssp101a.

DECALS

UNICOR offers custom police vehicle identification decals made to your agency specification. Decals are pressure sensitive and are easily applied to any clean surface. Decals can be produced from your original artwork or we can design artwork for you at a minimum charge. You will receive a sample for approval before your order is printed. For a quote, fax your request to (817) 413-3205.

MANUFACTURING CAPABILITIES

UNICOR's metals factories offer a diverse array of metal fabrication capabilities. The broad range of equipment styles and capacities allows the metal factories to accommodate a wide variety of products from short run custom projects to multiyear contracts. Teamed with the expertise of the Product Support Center, the Industrial Products Group can work with your technical experts from product design through manufacturing start-up. As your partner in the Federal Government, we can work with your team to quickly bring products on line without the cumbersome restrictions of the solicitation process. Credit card and EDI capabilities are also on line at FPI to make working together as simple as possible. Below is a brief summary of our current manufacturing processes.

Stamping

Punch press capabilities range from turret presses capable of producing 1000 parts per hour to 500-ton presses with 10-foot beds. Part sizes range from 3" braces through shelving uprights up to 16 feet long. Metal thicknesses from 24-gauge (0.024) through 10-gauge (0.135) are commonly used. Although low carbon steel is the most frequently used material, aluminum, stainless steel, and other metals can also be fabricated. Automatic coil feeders are used where appropriate to maximize production efficiency. A variety of tooling options are available including permanent tooling, universal tooling, and steel rule dies. The proper tooling approach is selected based on complexity, production volume, and budget considerations. CNC turret presses are available for short to medium runs where permanent tooling is not feasible due to lead time or cost constraints.

Forming

Every UNICOR metal factory is equipped with a wide range of mechanical and hydraulic press brakes to handle most metal forming needs. Capacities up to 300 tons are available with 12-foot beds and CNC back-gauging for outstanding accuracy and consistency. A variety of standard tooling configurations are in stock, and custom tooling can be developed in-house for special shapes. Roll forming machines with integral punch presses and flying cut-off are also available for high volume requirements in items such as pallet rack uprights and beams.

Machining

Flexible CNC turret lathes and machining centers can quickly turn designs into finished products. By integrating the CNC machines with computer-aided drafting and design stations, part designs are quickly and accurately converted from concept to reality. Carbon steel, stainless steel, and aluminum are routinely used; and other metals can be processed as well.

Welding

Resistance welding, MIG, and TIG welding expertise are on line at all UNICOR metal factories. We routinely handle carbon steel, stainless steel, and aluminum. American Welding Society procedures are utilized and certification of welders is available. Resistance welding is used for sheet steel in the range of 24-gauge (0.024") to 16-gauge (0.060"). Arc, MIG, and TIG welding are used for heavier gauge plate and tubing.

Coating/Finishing Systems

The modern powder coating systems used by UNICOR provide an attractive and durable finish. First, a multistage wash system prepares the parts for painting. A phosphate coating for improved paint adhesion is included in the wash cycle. Parts are then routed through a dry off oven before entering the powder paint booths. Electrostatic paint application ensures a uniform coating even in hard to reach areas. The finish is then cured to the required gloss and hardness in carefully controlled ovens. The standard coating is an epoxy base; however, other coatings including polyesters, acrylics, and hybrids are available. Numerous standard colors are available, and we can match FED STD 595A COLOR CHART.

Tool and Die

Each UNICOR metal factory is equipped to build and maintain its own tooling. In addition, the Product Support Center provides expertise in tooling design and fabrication for complex projects requiring the use of CNC machining centers as well as electrodischarge machining (EDM). From complex progressive dies to universal tooling, UNICOR's tool and die staff have the expertise to select the most cost effective tooling for your program.

Services

To support our line of material handling products such as shelving and pallet racks, UNICOR offers complete layout and bill of material development including site visits if required. We can either use your layout or develop the layout from building measurements. UNICOR staff and inmates can quickly turn the floor plan into a detailed quotation and layout. Complete installation services are also available nationwide. In addition to assembly and installation of shelving and pallet racks, UNICOR can provide floor preparation and minor repair. We can also provide relocation service to move existing material handling equipment from one facility to another. Our expert installation crews will make sure your facility not only looks good but is ready to go to work on schedule.

UNICOR Metal Factory Locations

El Reno, Oklahoma: The El Reno facility is located about one half hour west of Oklahoma City. Its primary product lines are pallet racking, institutional beds, and casters. In addition to a variety of stamping, forming, and welding machinery, the El Reno factory is equipped with two large roll forming machines used to produce pallet rack beams and uprights. Two powder paint lines are available to paint parts up to 20 feet in length.

Lewisburg, Pennsylvania: The Lewisburg factory is located about one hour north of Harrisburg and is housed within the walls of a United States Penitentiary. This facility is primarily dedicated to producing a variety of metal stampings and welded assemblies to support other UNICOR factories. Other product lines include lockers, cabinets, and shelving. Lewisburg is equipped with a very versatile mix of stamping, forming, and welding machinery and has two powder paint lines capable of handling parts up to 54" by 84".

Pekin, Illinois: The Pekin factory is located about 15 minutes south of Peoria in central Illinois. This facility is unique compared to other UNICOR metal factories due to its capabilities in machining as well as stamping and forming. Its equipment includes a CNC turret lathe with automatic bar feed for parts up to 10" in diameter. A baked enamel paint systems allows for quick paint change-out for shorter production runs. This factory is also equipped with a new high speed turret press. Without the investment in expensive hard tooling, the turret press can fabricate prototypes or production runs of complex parts in a wide variety of sizes and metal gauges.

Terminal Island, California: This facility is located south of Los Angeles and produces shelving, lockers, and tables. The factory has substantial capability in stamping and forming, including press brakes up to 300 tons. Arc MIG welding and resistance welding of carbon steel are routinely performed, and two powder paint lines provide outstanding finishing capability.

We are very proud of our facilities and would welcome an opportunity to provide you with a tour of any one of the above factories. For more information, please call (202) 305-3424.