XXI NOTES

Planning Guide

UNICOR

INTRODUCTION

XXI Notes is designed to meet the demands and flexibility of the modern office. Designed as a freestanding table based system, XXI Notes adapts from individual areas to shared workstations to cluster groupings to managerial modules. A wide variety of worksurface sizes and shapes meet the individual needs of all employees. Filing is accommodated with under-surface mounted pedestals, mobile pedestals and freestanding lateral files. Overhead storage units can be configured as open shelving or with lockable flipper doors. Personal filing requirements are handled by UNICOR's unique paper management components. Privacy screens, with tackable surfaces, help establish an individual's space and seated-height privacy, while maintaining standing-height visual contact. XXI Notes's design integrates function and ergonomics to provide solutions that meet ANSI/HFS 100-1988 and ADA user requirements.

PowerUp™ worksurfaces offer five levels of power and data access to meet most power and communications requirements.

XXI Notes is offered in a full range of colorful laminates, fabrics, and trims to meet your design expressions and also coordinates with UNICOR's Progression Family of system products.

This Planning Guide will provide you with solutions to meet your most demanding client's needs.

Overviews 2

Worksurface Planning 4

BASIC WORKSURFACES 5

TRANSITIONAL WORKSURFACES 6

ADJUSTABLE HEIGHT WORKSURFACES ... 9

XXI NOTES WITH POWERUP™ 14

PRINTER STANDS 16

PEDESTAL STORAGE 17

LATERAL FILES 18

WORKSURFACE ACCESSORIES 18

Overhead Storage 20

OVERHEAD STORAGE 20

OVERHEAD STORAGE ACCESSORIES ... 21

PAPER MANAGEMENT SYSTEM 21

Privacy Screens 22

PRIVACY SCREENS 22

Design Review 23

WORKSURFACES 23

XXI Notes Specifications 25

©1999 UNICOR Federal Prison Industries, Inc.

XXI Notes is a system of tables and components that are designed to work together to create many different workstation options. The illustration shows the system, its components and their typical applications (Figure 1).

Figure 1

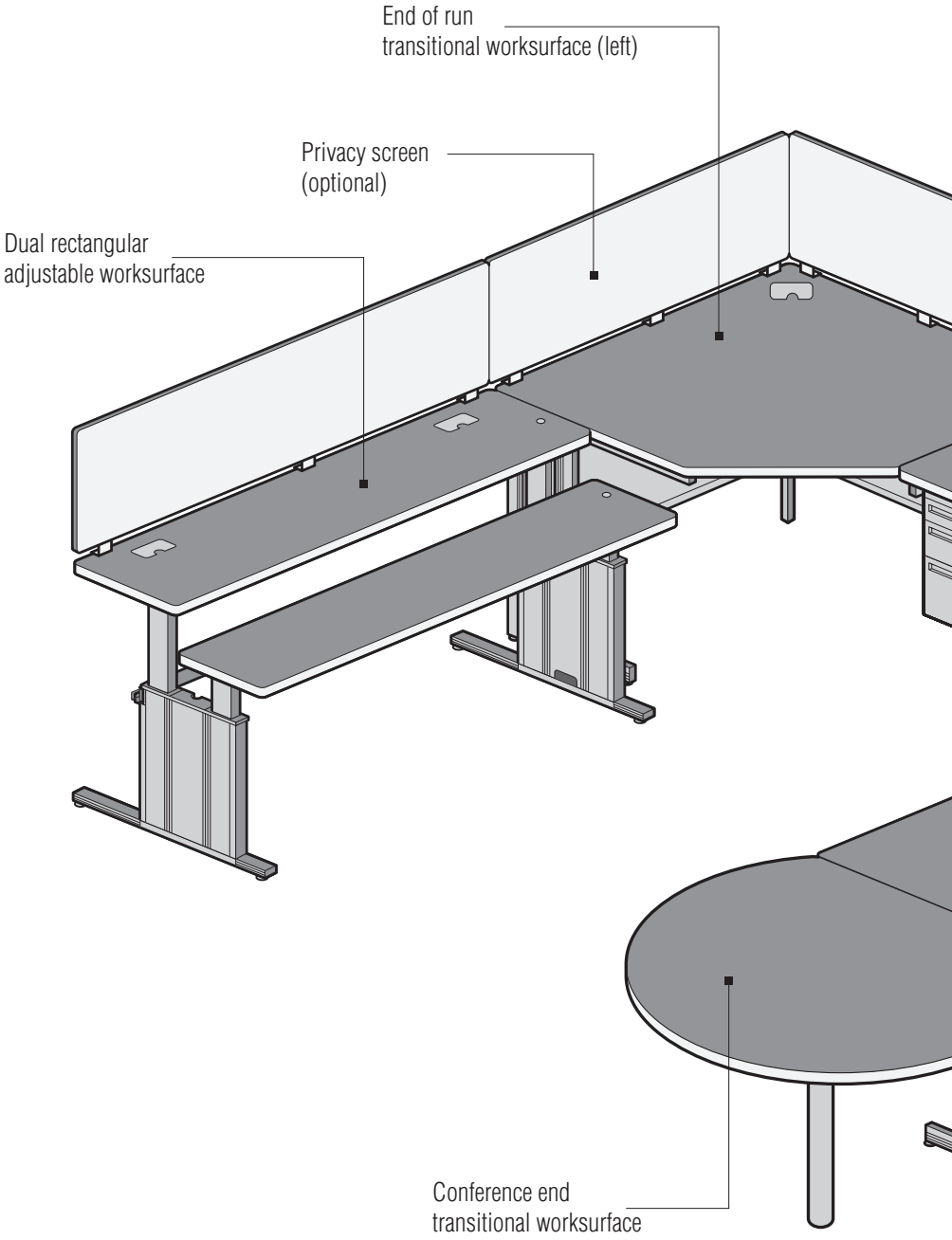

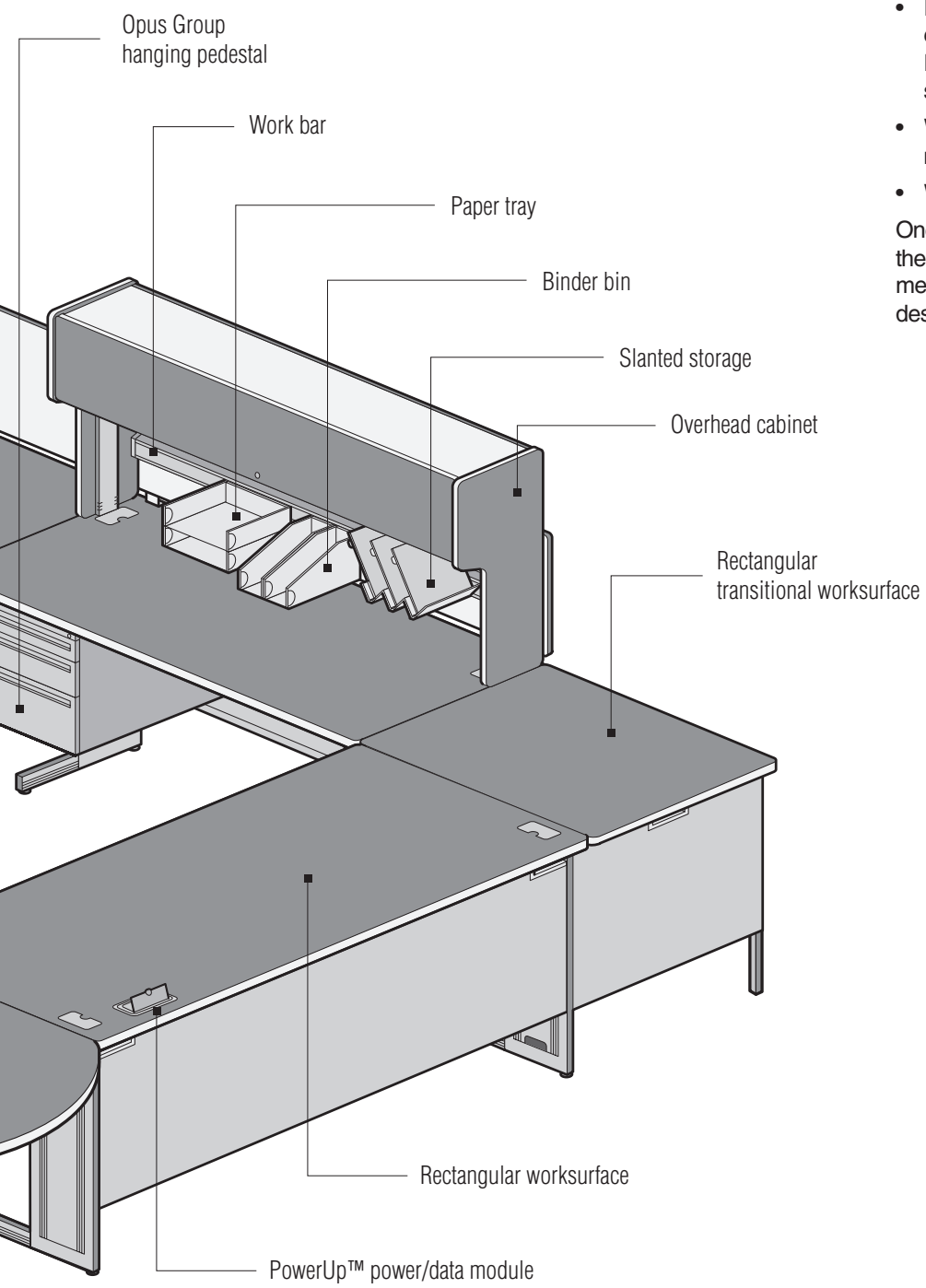

XXI NOTES PLANNING

When planning your XXI Notes workstations, survey the users for their needs by considering the following:

- How much worksurface area does each user need? What type of worksurfaces are needed?
- What accommodations must be made for computers, printers, power cables and low-voltage wires?
- How much and what type of storage space does each user need: Under the worksurface? Freestanding pedestals or lateral files? Overhead shelves or flipper door storage?
- What types of paper management units are needed?
- What level of privacy or accessibility is required?

Once you have surveyed the users and established their needs, you can design a XXI Notes environment to meet those needs using the products described in this planning and specifying guide.

Worksurfaces define the shape of the workstation and provide support for overhead storage, hanging pedestals, electrical componentry and privacy screens. XXI Notes offers these five types of worksurfaces:

- Basic Worksurfaces
- Transitional Worksurfaces
- Adjustable Worksurfaces
- PowerUp Worksurfaces
- Printer Stands

BASIC WORKSURFACES

Basic worksurfaces serve as primary worksurfaces, while other worksurface types meet specialized requirements. Basic Worksurfaces are available in the following sizes and shapes:

Rectangular	Stand-Up	Stand Alone	Adjustable Keyboard Pad Corner Rectangular	Stand Alone Corner
30", 36", 42" 48", 54", 60", 72" Wide 24" or 30" Deep	36" Wide x 30" Deep	36" or 42" Wide x 24" Deep 48" Wide x 30" Deep	30", 36", 42" 48", 54", 60", 72" Wide 24" or 30" Deep	42" Wide x 24" Deep 48" Wide x 30" Deep

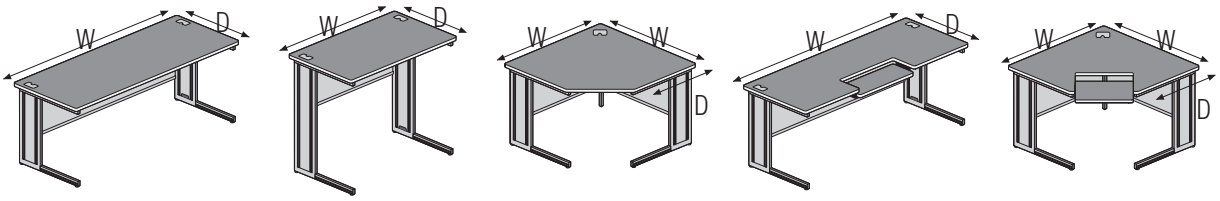

	Rectangular	Stand-Up	Stand Alone	Corner Rectangular	Stand Alone Corner
Heights:					
27"	■		■	■	■
29"	■		■	■	■
42"		■			
Edges:					
T-Molded	■	■	■	■	■
3mm PVC	■	■	■	■	■

Worksurface tops feature a 1-1/4" solid core with high-pressure laminate surface, available in a choice of many colors. The laminate on corner and keyboard corner worksurfaces runs diagonally, paralleling the front edge. Tops are available with flat vinyl T-molded edges or 3mm vinyl edges in a choice of five edge colors. (Figure 2).

Figure 2

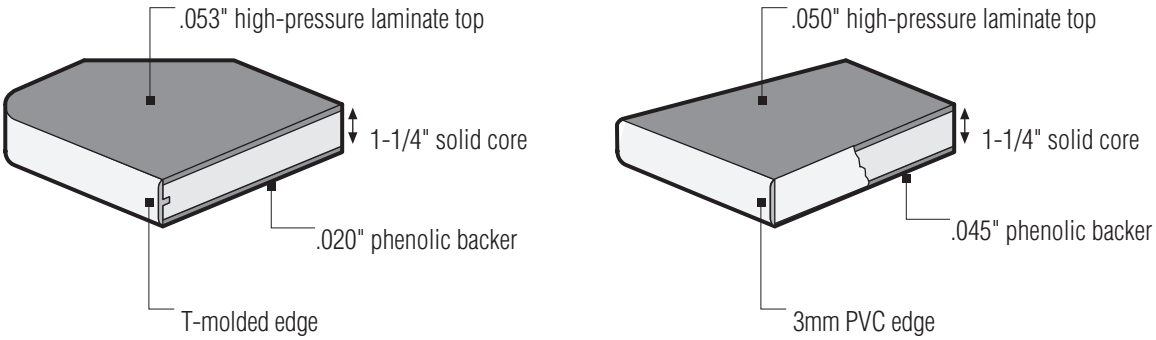

Figure 3

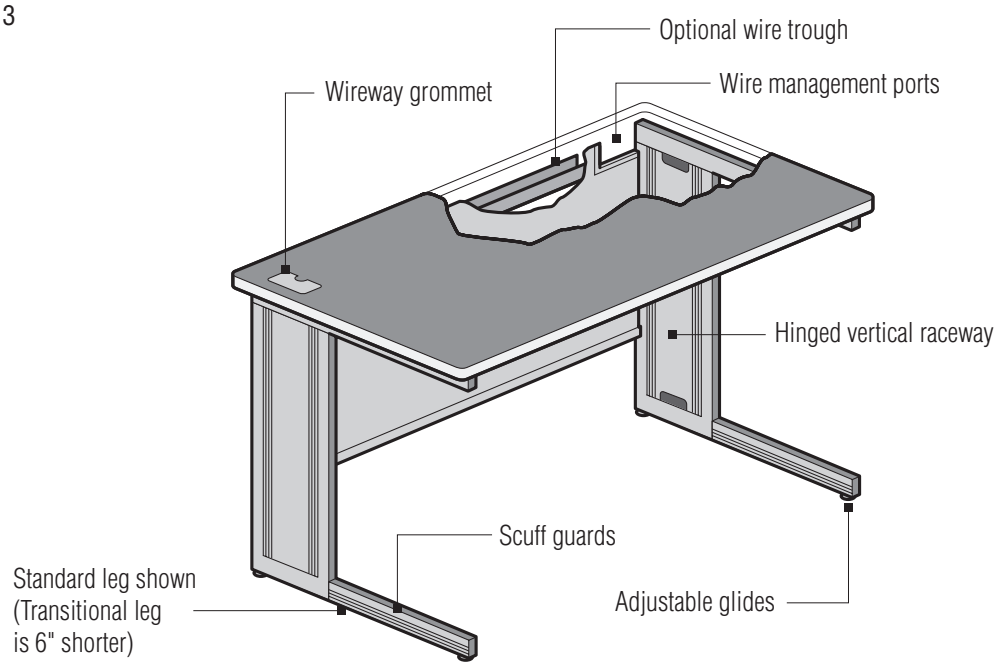

Rectangular Worksurface

Basic rectangular worksurfaces include two wireway grommets, located in the back corners of each worksurface. Grommets are color matched to the worksurface laminate trim edge color. The modesty panels have two wire management ports located in the top outside edge of each panel. An optional wireway trough for wire management is located at the top of the modesty panel.

Worksurfaces are supported by a heavy-gauge, seam-welded tubular steel frame and two welded steel legs joined by a steel modesty panel. Legs and modesty panels are color matched and available in the five trim colors. Internal vertical raceways with hinged doors are located on the inside of each leg to provide for easy wire management from the floor to the worksurface. Legs are equipped with adjustable chrome-plated glides to compensate for uneven floors (Figure 3). Separate caster kits may be ordered that include four casters, two with locks. Casters add 2" to the height of the worksurface; can only be used on worksurfaces without overheads.

Legs are available in two depths, standard and transitional. Transitional legs are six inches shorter in depth than the standard leg. This allows for more clearance for feet and chair movement where worksurfaces join in a straight line or corner applications.

Stand-up Worksurface

The stand-up worksurface has the same features as the rectangular worksurface, but is available in only one size — 30" deep by 36" wide by 42" high with the standard depth legs.

Stand Alone Corner Worksurface

Stand alone corner worksurfaces have the same basic construction as the rectangular worksurfaces. As the name implies, the stand alone corner worksurface is used where a freestanding corner worksurface is needed. In freestanding applications, standard legs must be used. If attached to a basic rectangular worksurface, transitional legs may be ordered for the sides of the attachment on both worksurfaces.

Rectangular Adjustable Keyboard Pad Worksurfaces

Rectangular adjustable keyboard pad worksurfaces have the same construction features as the basic worksurface except for the addition of the 10" by 24" keyboard pad. The pads have a 3" height adjustment, a tilt range of 15° positive and 15° negative, and 1" forward extension. Rectangular adjustable keyboard pad worksurfaces are available with the keyboard pad located left, right or center on widths of 48", 54", 60" and 72". The 36" and 42" wide worksurfaces are available with the keyboard pad located in the center position only.

Corner Adjustable Keyboard Pad Worksurfaces

Corner adjustable keyboard pad worksurfaces provide a fixed height worksurface with the 10" by 24" adjustable keyboard pad where a freestanding corner worksurface is needed. The corner worksurface is available with 27" and 29" high standard depth legs.

TRANSITIONAL WORKSURFACES

Transitional worksurfaces are used to connect two basic worksurfaces together to form a corner or to end a run of basic worksurfaces. They are available in the following sizes and shapes:

	Corner	Corner Keyboard Pad	Square	Rectangle	Triangle
	36" or 42" Wide x 24" Deep 48" Wide x 30" Deep	42" Wide x 24" Deep 48" Wide x 30" Deep	24" Wide x 24" Deep 30" Wide x 30" Deep	24" Wide x 30" Deep	42" Wide x 30" Deep
	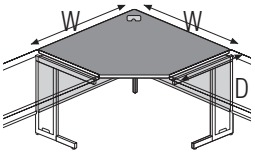	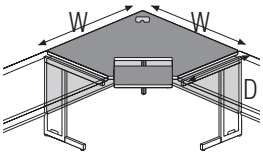	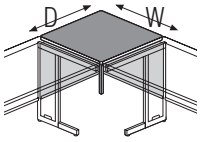	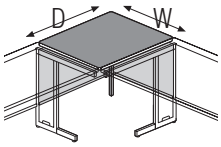	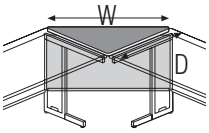
Heights:					
29" to 29"	■	■	■	■	■
29" to 27"	■	■	■	■	■
27" to 27"	■	■	■	■	■
Edges:					
T-Molded	■	■	■	■	■
3mm PVC	■	■	■	■	■

	End of Run	End of Run Keyboard Pad	Conference End	Peninsula
	36" or 42" Wide x 24" Deep 48" Wide x 30" Deep	42" Wide x 24" Deep 48" Wide x 30" Deep	42" Wide x 30" Deep	48", 60", 72" Wide x 30" Deep
	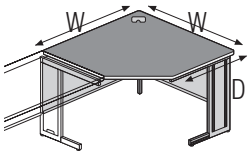	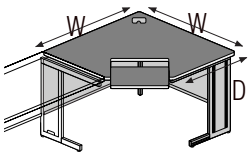	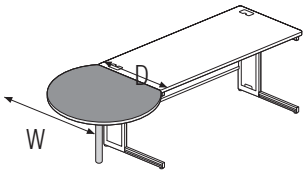	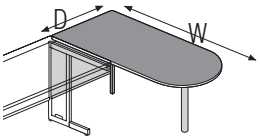
Heights:				
27"	■	■		
29"	■	■	■	■
Edges:				
T-Molded	■	■	■	■
3mm PVC	■	■	■	■

Transitional Worksurfaces

Transitional worksurfaces make the transition around corners and rely on fixed height basic worksurfaces for their support.

Transitional worksurfaces feature full wrap modesty panels and 1-1/4" solid core tops with high-pressure laminate surface. Corner and end of run worksurfaces have a grommet located in the back corner and are available with the optional wireway trough.

Hardware is included for attachment to adjoining worksurfaces for the condition specified. For same height installations, two splice plates are provided. For 29" to 27" installations, a splice plate and “Z” bracket are provided.

For transitional worksurfaces you must specify:

1. Transition direction to determine the proper mounting hardware.

Figure 6

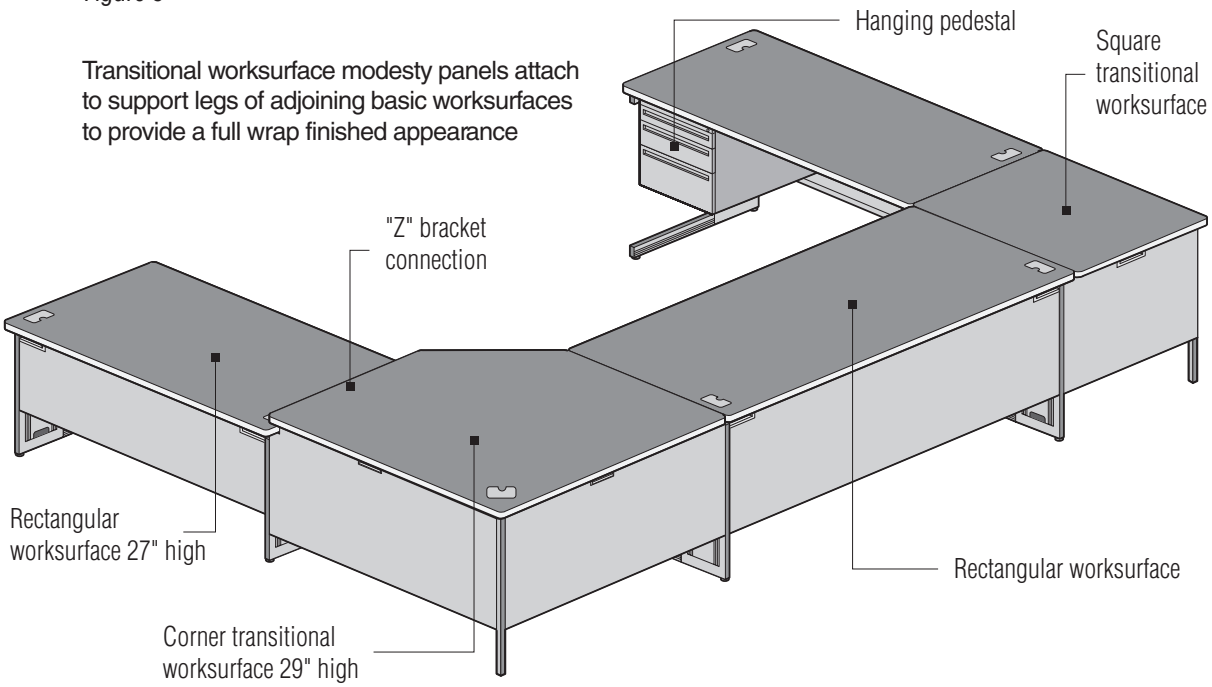

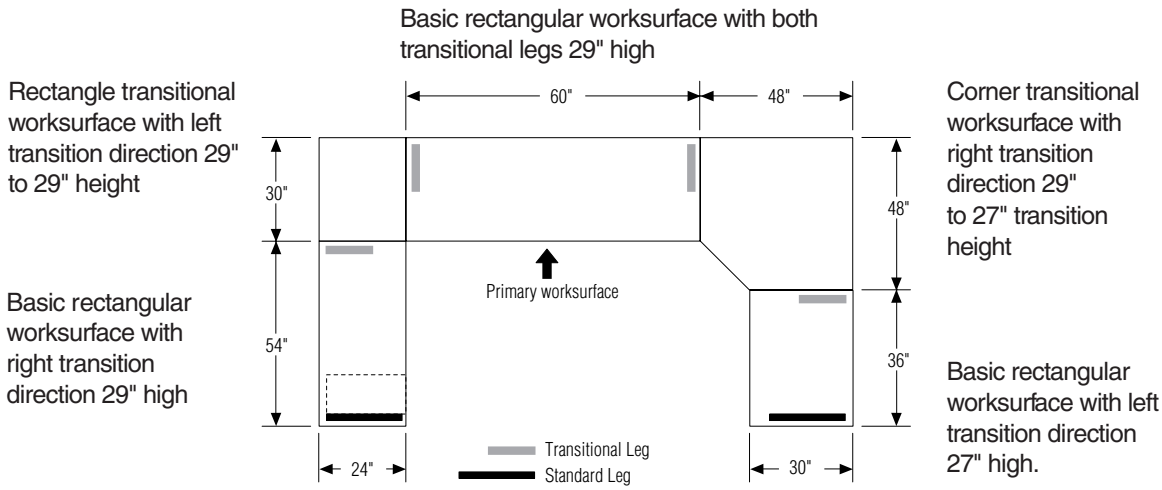

- Transition direction is determined by the relationship of the transitional worksurface to the primary basic worksurface. The primary worksurface is the major work area and is determined by its size, height, width and depth to be the largest worksurface in the work-station. When facing the primary worksurface, a right transition attaches to your right (Figure 6).
- For a square, corner or triangular transitional worksurface at the same height (29" to 29" or 27" to 27"), direction is not required and you can specify (x) for none. However, care should be taken to specify the correct direction for rectangular, end of run and the 29" to 27" height change to ensure the proper hardware and legs are included.

2. Transition height for transitional worksurfaces.
   - All transitional worksurfaces, except the end of run, conference end and peninsula worksurfaces are available in three height options: 29" to 29", 29" to 27" and 27" to 27" and need to be specified.
3. Location of transitional legs on adjoining basic worksurfaces.
   - Transitional legs should be specified whenever two worksurfaces are joined by a transitional worksurface. The end of run worksurface also has the choice of a standard or transitional leg (Figure 6).

Corner Transitional Worksurface

Corner transitional worksurfaces are available in three sizes: 36" by 36", 42" by 42" and 48" by 48". the 36" and 42" worksurfaces have sides that match the 24" deep worksurfaces and the 48" has sides that match the 30" deep worksurfaces. They include a 7/8" square tubular corner support leg with a stainless steel adjustable glide and full wrap modesty panels with wire management ports located in the top center of each panel. Transitional worksurface tops attach to fixed height basic worksurfaces at the worksurface. The modesty panels attach to the legs of the adjoining basic worksurface to provide a full wrap finished appearance. Tops are available in the same construction and finishes as basic worksurfaces and include one grommet located in the back corner.

Corner Keyboard Pad Transitional Worksurface

Corner keyboard pad transitional worksurfaces have the same construction and features as the corner transitional worksurface with the addition of the 10" by 24" keyboard pad. The pads have a 3" height adjustment, a tilt range of 15° positive and 15° negative and 1" forward extension. They are available in 42" by 42" and 48" by 48" with the 42" surface matching the depth of a 24" deep fixed height basic worksurface and the 48" surface matching the 30" deep.

Square Transitional Worksurface

Square transitional worksurfaces are available as 24" or 30" square units and are used with matching depth fixed height basic worksurfaces to fill in a corner. They include a 7/8" square tubular corner support leg with a stainless steel adjustable glide, and full wrap modesty panels with wire management ports located in the top outside corner of each panel.

Rectangle Transitional Worksurface

Rectangle transitional worksurfaces are 24" by 30" and are used to match a 24" deep fixed height basic worksurface with a 30" deep worksurface at a corner. Special attention must be paid to the transition direction; either a Right (R) or Left (L) transition must be specified. Worksurfaces include a 7/8" square tubular corner support leg with a stainless steel adjustable glide, and full wrap modesty panels with wire management ports located in the top outside edge of each panel.

Triangle Transitional Worksurface

The triangle transitional worksurface joins two 30" deep fixed height basic worksurfaces to form a diagonal corner. The full width modesty panel attaches to the support legs of the adjoining worksurfaces.

End of Run Transitional Worksurface

End of run transitional worksurfaces are available in three sizes: 36" by 36", 42" by 42" and 48" by 48". The 36" and 42" worksurface units attach to 24" deep worksurfaces and the 48" unit attaches to 30" deep worksurfaces. They include an end support leg, a 7/8" square tubular corner support leg with a stainless steel adjustable glide, and full wrap modesty panels with wire management ports located in the top center of each panel.

End of Run Transitional Keyboard Pad Worksurface

End of run transitional keyboard pad worksurfaces have the same construction and features as the end of run transitional worksurface with the addition of the 10" by 24" keyboard pad. The pads have a 3" height adjustment, a tilt range of 15° positive and 15° negative, and 1" forward extension. They are available in 42" by 42" and 48" by 48" with the 42" surface matching the depth of a 24" deep fixed height basic worksurface and the 48" surface matching the 30" deep.

Conference End Transitional Worksurface

The conference end worksurface is 42" in diameter with a single 3" diameter steel tubular leg. The worksurface attaches to the end of a 29" high, 30" deep worksurface.

Peninsula Transitional Worksurface

Peninsula worksurfaces are available 29" high, 30" deep by 48", 60" or 72" wide. They include a 3" diameter steel tubular leg and hardware to install in the mounting configuration specified: end, side or center mounted. Side and center mount peninsula worksurfaces have modesty panels. A wire management port is located in the center at the top of each modesty panel.

ADJUSTABLE HEIGHT WORKSURFACES

XXI Notes offers a complete range of adjustable height worksurfaces with manual or electric adjustments (Figure 7).

Figure 7

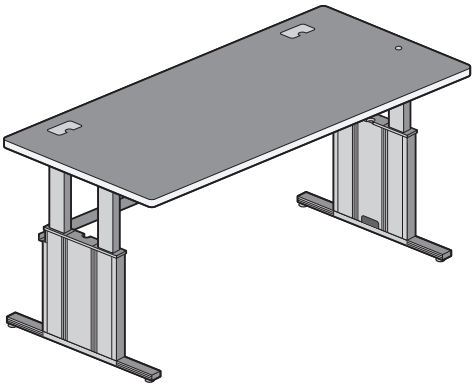

Single rectangular adjustable worksurface

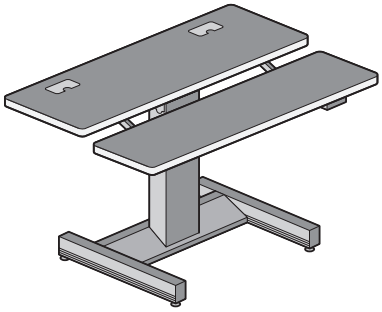

Single pedestal electrically height-adjustable dual rectangular worksurface

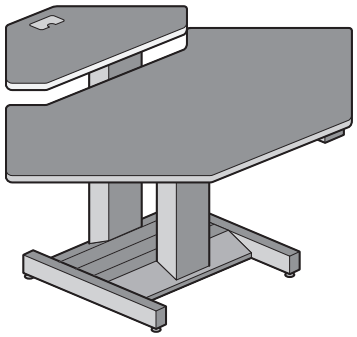

Dual pedestal dual corner electrically height-adjustable worksurface

MANUAL HEIGHT-ADJUSTABLE WORKSURFACES

Manual height-adjustable worksurfaces are available with single or dual tops that are the same construction and finishes as the basic worksurfaces. Height adjustment is 23" to 34" and is obtained by a chain driven sprocket at a rate of one-inch per eight turns of the worksurface mounted height control knob. The height adjustment control can be specified for location on the left or right of the worksurface for the operator's convenience. Wire management is provided by an integral, channel mounted between the lower leg assembly, or by an optional wireway mounted under the worksurface. Optional modesty panels attach to the worksurface to conceal an area 7" below the worksurface. Legs are equipped with adjustable chrome-plated glides, or optional caster kits are available that include four casters, two with locks. Casters add 2" to the height of the worksurface.

Manual height-adjustable worksurfaces are available in the following sizes and shapes:

	Single Rectangular	Single Rectangular for Overhead	Single Corner
	30", 36", 42", 48", 54", 60", 72" Wide 24" or 30" Deep	30", 36", 42", 48", 54", 60", 72" Wide 24" or 30" Deep	42" Wide x 24" Deep 48" Wide x 30" Deep
	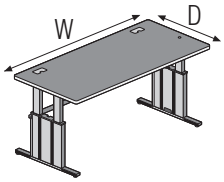	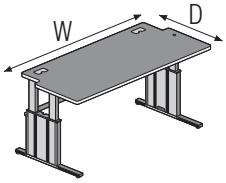	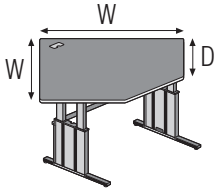
Height Adjustment:			
23" to 34"	■	■	■
Edges:			
T-Molded	■	■	■
3mm PVC	■	■	■

	Dual Rectangular	Dual Corner	Dual Slide/Tilt Rectangular	Dual Slide/Tilt Corner
	30", 36", 42", 48", 54", 60", 72" Wide 30" Deep	42" Wide x 24" Deep 48" Wide x 30" Deep	36", 42", 48", 54", 60", 72" Wide 30" Deep	42" Wide x 24" Deep 48" Wide x 30" Deep
	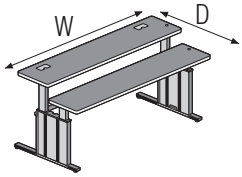	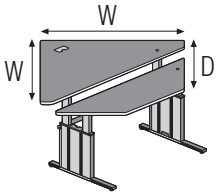	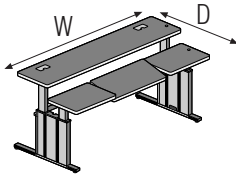	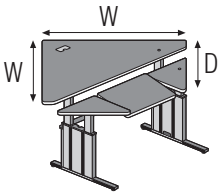
Height Adjustment:				
23" to 34"	■	■	■	■
Edges:				
T-Molded	■	■	■	■
3mm PVC	■	■	■	■

Single Rectangular Adjustable Worksurface

Single rectangular adjustable worksurfaces feature a single rectangular top in two depths and seven widths. The 30" to 42" wide tops have one grommet located in the back center. The 48" to 72" wide worksurfaces have two grommets, one in each back corner.

Single Rectangular Adjustable Worksurface for Overheads

Single rectangular adjustable worksurfaces for overheads are specially designed worksurfaces. They have clearance cut-outs on each side for mounting the overhead cabinets, and shelves that are designed to attach to the base of these worksurfaces. They are available in the full range of sizes and with the same grommet options as the single rectangular adjustable worksurfaces.

Single Corner Adjustable Worksurface

Single corner adjustable worksurfaces feature a single top in two depths and two widths. The 42" tops have 24" sides that match the depth of 24" deep basic worksurfaces. The 48" surface matches the depth of 30" deep basic worksurfaces. A single grommet is located in the rear corner.

Dual Rectangular Adjustable Worksurface

Dual rectangular adjustable worksurfaces have two adjustable surfaces — a keyboard surface that is 11-1/2" deep and a rear surface that is 17-1/2" deep. The 30" to 42" wide rear surfaces have one grommet located in the back center. The 48" to 72" wide rear surfaces have two grommets, one in each back corner.

Dual Corner Adjustable Worksurface

Dual corner adjustable worksurfaces feature two adjustable surfaces, in two depths and two widths. The 42" tops have sides that match the depth of 24" deep basic worksurfaces. The 48" surface matches the depth of 30" deep basic worksurfaces. The 42" units have a 13-1/2" deep keyboard and 31" deep rear surface. The 48" units have a 17-1/2" deep keyboard and 35-3/4" deep rear surface. A single grommet is located in the rear corner.

Dual Slide/Tilt Rectangular Adjustable Worksurface

Dual slide/tilt rectangular adjustable worksurfaces have two adjustable surfaces — a keyboard surface that is 11-1/2" deep and a rear surface that is 17-1/2" deep. The front keyboard is 22" wide, has a tilt range of 15° positive and 15° negative, and 5" of forward and back travel. The 30" to 42" wide rear surfaces have one grommet located in the back center. The 48" to 72" wide rear surfaces have two grommets, one in each back corner.

Dual Slide/Tilt Corner Adjustable Worksurface

Dual slide/tilt corner adjustable worksurfaces feature two adjustable surfaces, in two depths and two widths. The 42" tops have sides that match the depth of 24" deep basic worksurfaces. The 48" surface matches the depth of 30" deep basic worksurfaces. The 42" units have a 13-1/2" deep keyboard and 31" deep rear surface. The 48" units have a 17-1/2" deep keyboard and 35-3/4" deep rear surface. The front keyboard is 22" wide, has a tilt range of 15° positive and 15° negative, and 5" of forward and back travel. A single grommet is located in the rear corner.

ELECTRICALLY HEIGHT-ADJUSTABLE WORKSURFACES

Electrically height-adjustable worksurfaces have two levels of adjustability. A single center pedestal adjusts the worksurface height or double pedestals provide independent adjustability for front and rear worksurfaces. The standard AC motor provides 250 pounds of lift *(Optional lift capacities are available on special order)*. The electronic control for adjusting the worksurfaces is located under the front edge of the worksurface and can be field-changed from right to left for easy access. Electrically adjustable units have the worksurfaces undersized by 1" on both sides and rear for proper clearance during operation.

SINGLE PEDESTAL ELECTRICALLY HEIGHT-ADJUSTABLE WORKSURFACES

Electrically height-adjustable worksurfaces, with single pedestal, are available in the following sizes and shapes:

	Single Rectangular	Single Corner	Dual Rectangular	Dual Corner
	34", 40", 46", 52", 58" Wide 29" Deep	40" Wide x 23" Deep 46" Wide x 29" Deep	34", 40", 46", 52", 58" Wide 29" Deep	40" Wide x 23" Deep 46" Wide x 29" Deep
	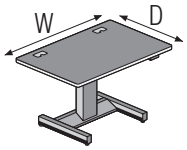	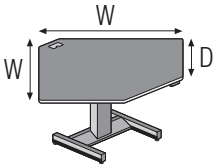	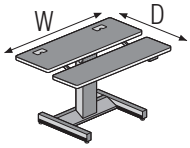	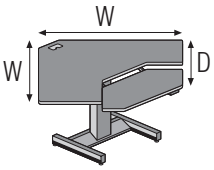
Height Adjustment:				
26" to 41"	■	■	■	■
Edges:				
T-Molded	■	■	■	■
3mm PVC	■	■	■	■

Single Rectangular Electrically Height-Adjustable Worksurfaces

Single rectangular adjustable worksurfaces feature a single rectangular top in one depth and five widths. The 34" to 40" wide tops have one grommet located in the back center. The 46" to 58" wide worksurfaces have two grommets, one in each back corner.

Single Corner Electrically Height-Adjustable Worksurfaces

Single corner adjustable worksurfaces feature a single top in two depths and two widths. The 40" tops have 23" sides for use with 24" deep basic work-surfaces and the 46" surface is for use with the 30" deep. A single grommet is located in the rear corner.

Dual Rectangular Electrically Height-Adjustable Keyboard Worksurfaces

Dual rectangular adjustable worksurfaces have two adjustable surfaces — a keyboard surface that is 11-1/2" deep and a rear surface that is 16-1/2" deep. The single pedestal adjusts the overall height of the unit and the keyboard is adjusted with the PositionMate™ keyboard mechanism. The PositionMate keyboard mechanism provides a height adjustment range from 21" to 47" and a tilt range of 15° positive and 15° negative. The 34" to 40" wide rear surfaces have one grommet located in the back center. The 46" to 58" wide rear surfaces have two grommets, one in each back corner.

Dual Corner Electrically Height-Adjustable Keyboard Worksurfaces

Dual corner adjustable worksurfaces feature two adjustable surfaces — a keyboard surface and a rear surface. The single pedestal adjusts the overall height of the unit and the keyboard is adjusted with the PositionMate keyboard mechanism. The PositionMate keyboard mechanism provides a height adjustment range from 21" to 47" and a tilt range of 15° positive and 15° negative. The 40" tops have 23" sides for use with 24" deep worksurfaces, a keyboard surface that is 11" deep and a rear surface that is 24" deep. The 46" tops have 29" sides for use with 30" deep work-surfaces, a keyboard surface that is 14" deep and a rear surface that is 29-1/2" deep. A single grommet is located in the rear corner.

DOUBLE PEDESTAL ELECTRICALLY HEIGHT-ADJUSTABLE WORKSURFACES

Electrically height-adjustable worksurfaces, with double pedestals, are available in the following sizes:

Dual Corner

40" Wide x 23" Deep
46" Wide x 29" Deep

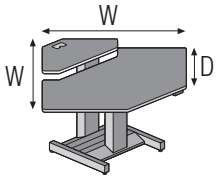

Height Adjustment:	
26" to 41"	■
Edges:	
T-Molded	■
3mm PVC	■

Dual Corner Electrically Height-Adjustable Worksurface

Dual corner adjustable worksurfaces feature two adjustable surfaces, in two depths and two widths. The double pedestals adjust the overall height of each surface independently. The 40" tops have 23" sides for use with 24" deep worksurfaces, a front surface that is 17-1/4" deep and a rear surface that is 18" deep. The 46" tops have 29" sides for use with 30" deep worksurfaces, a front surface that is 25-2/3" deep and a rear surface that is 18" deep. A single grommet is located in the rear corner.

The double pedestal dual corner adjustable worksurfaces are available in two different models with these features:

1. Height adjustable.
2. Height adjustable with rear sliding surface. Surface slides 13" forward.

XXI NOTES WITH POWERUP™

PowerUp is a three-part system that consists of a power/data module, a wire management system and an eight-wire, four-circuit electrical distribution system. PowerUp is offered in five levels which include individual parts of the system or combinations of the parts to custom tailor a workstation. PowerUp is offered with basic rectangular worksurfaces and rectangular adjustable keyboard pad worksurfaces. These options can be ordered individually or added later with field motifications.

The Power/Data Module

- The power/data module has a flip-up cover that locks in place for access to a 110-volt duplex receptacle and two AT&T brand, type “M” ports. Other brands and types of connectors can be incorporated into the system. However, all brands of connectors must be ordered separately from a third-party source. Power is supplied by a power cord with a 3-prong plug. The cord is 22" long when used with level five tables and 108" long when used with level one and level three tables.

The Wire Management System

- The wire management system attaches under the worksurface between the table legs. It has a data door that conceals a steel divider that separates power and data cables, a table-to-table steel wireway, a splice plate and notched vertical wireways on the legs to pass cables through to the next table.

The Eight-Wire Four-Circuit Electrical Distribution System

- The eight-wire four-circuit electrical distribution system attaches to the underside of the worksurface for Levels 4 and 5 PowerUp applications. The 30" to 54" wide worksurface harness accommodates two, 15 amp duplex receptacles. The 60" and 72" wide worksurface harness can accommodate up to four duplex receptacles.
- Receptacles are available to access the four circuits within the harness and must be ordered separately. They are marked for the circuit they will access. Circuits 1, 2 and 3 are convenience circuits and share a common neutral and ground. They are black in color. Circuit 4 is used as a dedicated circuit and has its own neutral and ground. Circuit 4 is easily identified by its orange color.
- Power is supplied to the distribution harness from a floor or wall source with the floor power infeed kit. The kit includes 6' of plastic covered flexible metal conduit with a 1/2", 90° waterproof connector. Two steel covers are included to replace the existing plastic vertical wireways in the table leg. The infeed kit brings power through the table leg and attaches to the connector at the end of the distribution harness. When tables are used in a run and power is being transferred from table-to-table, the infeed kit must be placed at either end of the run.
- Power is transferred from table-to-table with the eight-wire table-to-table connector. The 18" long connector plugs into the ends of the distribution harnesses to continue power from table-to-table. A steel wireway and splice plate are included to attach the tables together and shield the connector between tables.

The PowerUp system occupies space at the back of each worksurface, restricting the amount of room available for hanging or placing pedestals under the worksurface. The following list is the recommended pedestal usage for XXI Notes worksurfaces:

- 24" Deep x 29" High Worksurface
  - Hanging ..... Not recommended.
  - Mobile ..... Recommended maximum depth pedestal of 17-5/8".
  - Freestanding... Recommended maximum depth of 21-5/8".
- 24" Deep x 27" High Worksurface
  - Hanging ..... Not recommended.
  - Mobile ..... Recommended maximum depth pedestal of 17-5/8".
  - Freestanding... Not recommended.
- 30" Deep x 29" High Worksurface
  - Hanging ..... Recommended maximum depth pedestal of 17-5/8".
  - Mobile ..... Recommended maximum depth pedestal of 17-5/8".
  - Freestanding .. Recommended maximum depth pedestal of 27-5/8".
- 30" Deep x 27" High Worksurface
  - Hanging ..... Recommended maximum depth pedestal of 17-5/8".
  - Mobile ..... Recommended maximum depth pedestal of 17-5/8".
  - Freestanding... Not recommended.

Figure 1

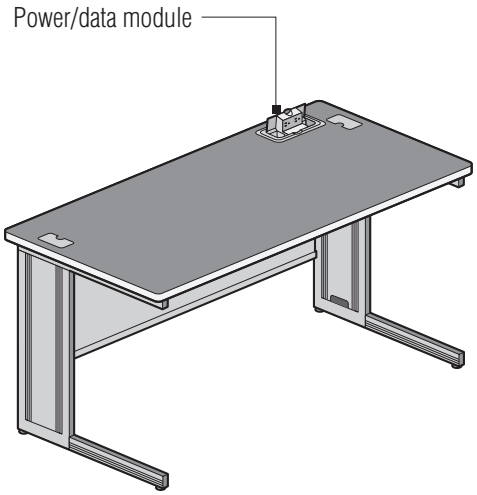

Level One PowerUp
Level one PowerUp consists of the power/data Module with a 108" power cord and a steel guard to protect the underside of each module. Worksurfaces 30" to 54" wide have one module located at the right rear of the worksurface. Worksurfaces 60" to 72" wide have two modules, one on each side at the rear of the worksurface (Figure 1).

Figure 2

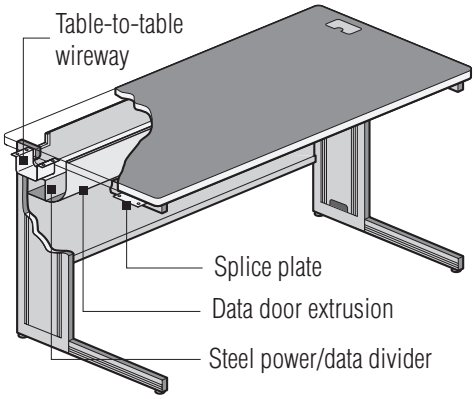

Level Two PowerUp
Level two PowerUp has a wire management system that attaches under the worksurface between the table legs. It has a data door that contains a steel divider that separates power and data cables, a table-to-table steel wireway, a splice plate and notched vertical wireways on the legs to pass cables through to the next table (Figure 2).

Figure 3

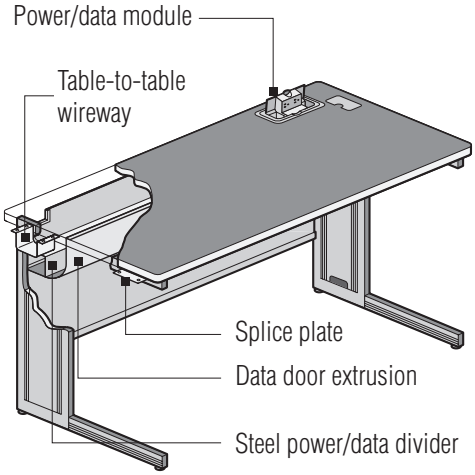

Level Three PowerUp
Level three PowerUp is a combination of levels one and two (Figure 3).

Figure 4

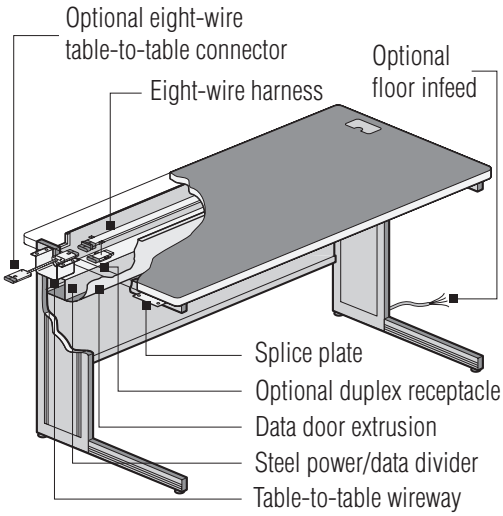

Level Four PowerUp
Level four PowerUp includes the wire management system of level two plus the addition of an eight-wire four-circuit electrical system (Figure 4).

Figure 5

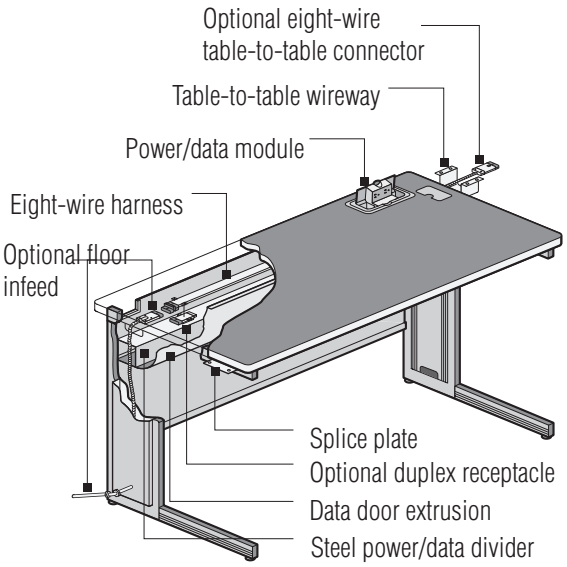

Level Five PowerUp

Level five PowerUp incorporates all three elements of the PowerUp system: Power/data module with 22" cord, the wire management system and the eight-wire four-circuit electrical system (Figure 5).

PRINTER STANDS

XXI Notes offers two printer stands to meet a variety of needs. The basic printer stand matches the basic rectangular worksurfaces for style and construction features. The universal printer stand offers infinite adjustability.

Basic Printer Stand

36" Wide x 30" Deep

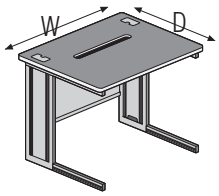

Universal Printer Stand

24" Wide x 27 " Deep

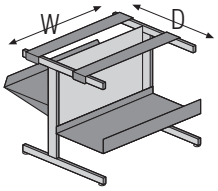

Heights:		
27"	■	■
29"	■	
Edge:		
T-Molded	■	

Basic Printer Stand

The basic printer stand has all the same features as the rectangular worksurface, but is available with only the flat vinyl T-molded edge. The top has a center slot for paper feed and an optional receiver basket that attaches to the back of the worksurface. The receiver basket adds 11" to the depth of the top.

Universal Printer Stand

The universal printer stand is a formed steel construction. It has front and back trays with three vertical adjustments and an adjustable frame top that will accommodate printers up to 24" wide x 27-1/2" deep. It is available in the five trim colors.

Figure 1

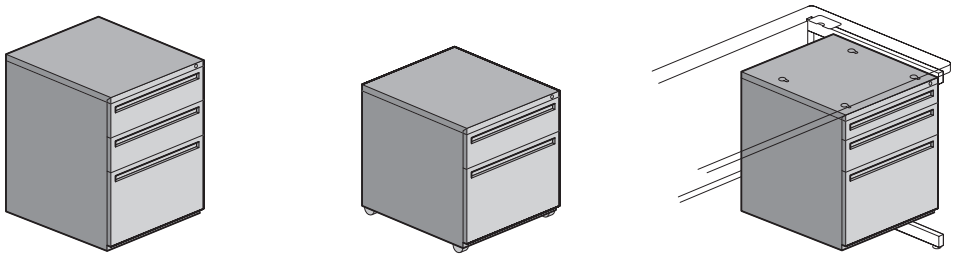

Freestanding Mobile Hanging

PEDESTAL STORAGE

Pedestal storage for XXI Notes is provided by The Opus Group pedestals. Three styles are available to meet personal storage requirements: freestanding, mobile and hanging pedestals (Figure 1).

Pedestals are available in three depths; 17-5/8" that may be used with any depth worksurface, 21-5/8" for maximum storage under a 24" worksurface and 27-5/8" for use under 30" worksurfaces. Worksurfaces are predrilled to accept any style hanging pedestal.

NOTE: To allow for clearance to the wire management system on powerup worksurfaces, specific sizes and styles of pedestals must be used. Refer to chart under XXI Notes with PowerUp for the correct usage.

The 12" file and 15" EDP drawer sizes have full extension slide arm suspensions for full access to storage space. The 3" pencil drawers and 6" box drawers have three-quarter extension, steel ball-bearing suspension.

Locks are included in each pedestal and are random keyed. Specific keying combinations are available at no charge, but must be specified on the original order with a note.

Freestanding Pedestals

Freestanding pedestals have a finished top and four adjustable glides. They may be placed under a XXI Notes worksurface or anywhere else in the office. A counterbalance weight (not included) is recommended when freestanding units are not placed under worksurfaces.

Mobile Pedestals

Mobile pedestals have a finished top and four twin-wheel hooded casters. Front casters are locking and back casters are non-locking. A counterbalance weight is included with each unit. Mobile pedestals may be placed under a XXI Notes worksurface or anywhere else in the office.

Hanging Pedestals

Hanging pedestals have keyhole slots for attachment under XXI Notes basic worksurfaces.

ADJUSTABLE XXI NOTES STORAGE MODULE

Adjustable XXI Notes storage modules attach to the leg of manual adjustable height worksurfaces. They are available in three styles: one file drawer, two box drawers or two pencil and one box drawer combination. Units are 15" wide, 17-5/8" deep and 13-5/16" high, and can be mounted to the outside or inside of the leg (Figure 2).

Figure 2

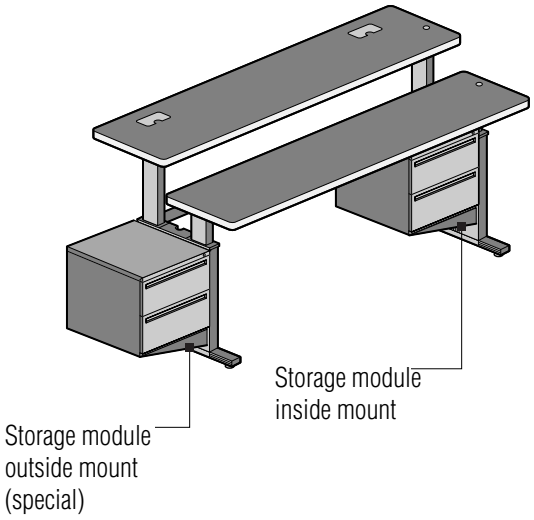

CENTER DRAWER

Center drawers are formed steel construction with a molded plastic compartment tray. Locks are included and are random keyed. Specific keying combinations are available at no charge, but must be specified on the original order with a note. They attach under basic XXI Notes worksurfaces and are available in the five trim colors (Figure 3).

Figure 3

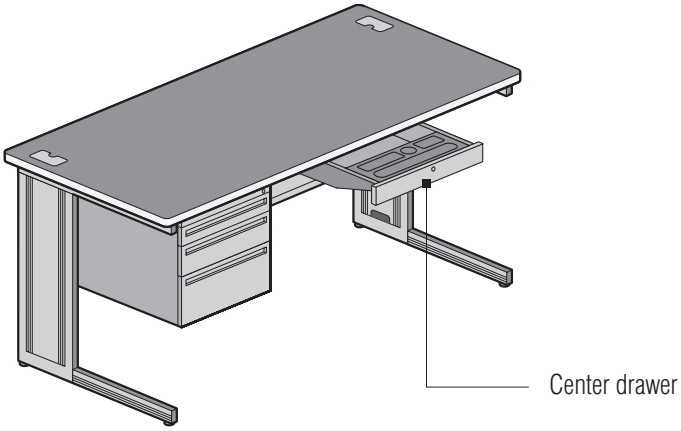

LATERAL FILES AND STORAGE UNITS

To provide high volume filing in a XXI Notes workstation, UNICOR offers The Opus Group lateral files, EDP media units, cupboards and kiosks. These filing and storage units match XXI Notes pedestals in appearance and are available in a wide range of sizes to meet any filing need. See The Opus Group catalog and price list for a complete product offering of both standard and custom filing and storage solutions (Figure 4).

Figure 4

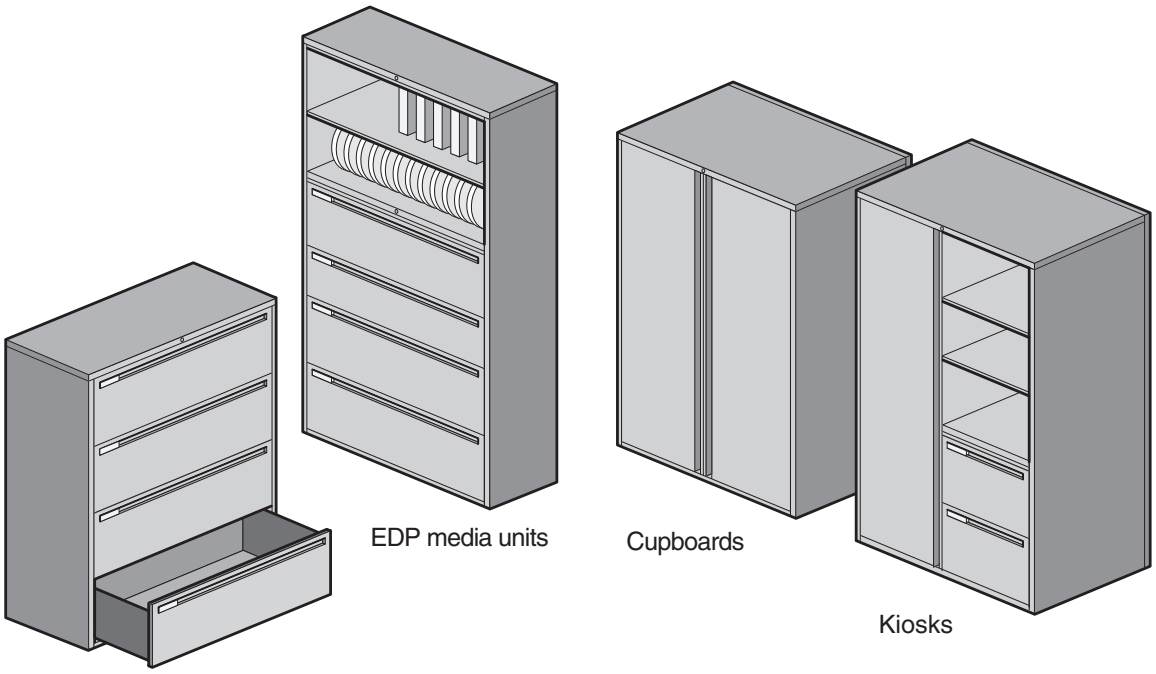

WORKSURFACE ACCESSORIES

XXI Notes offers a full range of accessories to facilitate the use of computers in the workstation.

Figure 1

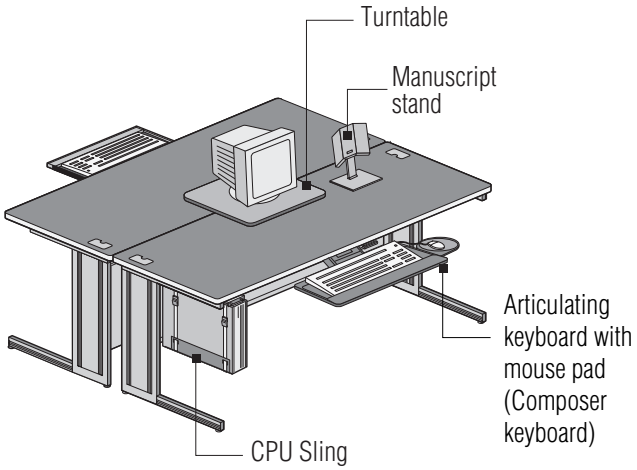

Figure 2

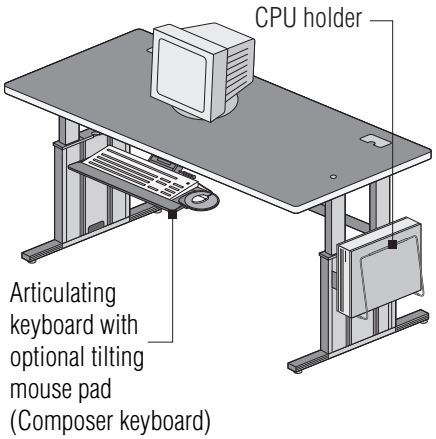

Manuscript Stand

The manuscript stand is height- and tilt-adjustable to hold materials so they can be easily referenced. Stands are freestanding so they may be placed anywhere on the worksurface (Figure 1).

Turntable

Turntables rotate 360° to provide shared use of computer, keyboard or terminal screen. They have a laminate top with flat vinyl edge and are available in two sizes: 15" by 18" and 20" by 24" (Figure 1).

Articulating Keyboard with Mouse Pad

The fully adjustable articulating keyboard with mouse pad and wrist rest attaches to the underside of basic corner or rectangular worksurfaces and transitional corner worksurfaces. They feature 7" vertical height adjustment and a tilt range of 0° to 20°. The keyboard tray swivels 359° and retracts to store below worksurface. Three track lengths are available: 16", 17 , and 20 ". The keyboard tray with wrist rest is 10 " deep by 20" wide and the mouse pad is 9" diameter and can be mounted to the left or right of the tray. They are available in black only (Figure 1). (See Composer cut sheet for specific details)

Tilting Mouse Pad

Tilting mouse pads attach to the articulating keyboard with mouse pad. They feature a 9" diameter mouse pad and bracket assembly that permits the mouse pad to tilt and be mounted above the tray so it can be rotated for storage without removing the mouse. They have a neoprene surface and are available in black only (Figure 2). (See Composer cut sheet for specific details)

CPU Sling

The CPU sling is designed for use with basic rectangular worksurfaces only. It attaches to the underside of rectangular worksurfaces and accommodates a range of CPU's up to 65" in circumference and a maximum of 75 pounds. It provides 5 " of front-to-back travel and 359° swivel for ease of accessibility. The CPU sling is black only (Figure 1).

CPU Holder

The CPU holder is designed for use with manual height-adjustable XXI Notes worksurfaces only. It attaches to the inside or outside of the worksurface leg and accommodates a range of CPU's from 4" to 8 " thick. The holder is available in the five trim colors. Consult your hardware supplier to determine if your unit can be placed horizontally (Figure 2).

OVERHEAD STORAGE

XXI Notes offers three styles of laminated overhead storage units for use with basic rectangular worksurfaces and the same three styles with different end panels and mounting hardware for rectangular height-adjustable worksurfaces for overheads. They are available as a flipper door unit, a flipper door on one half and an open shelf on the other in 60" and 72" widths, or as open shelves. Overhead units must match the width of the worksurface it is to be used with. Overheads for basic rectangular worksurfaces attach through the grommets in the top of the worksurface. They have vertical wire channels that conceal the attachment and wires from the top of the shelf to the worksurface.

Overhead cabinets are 34" high and have 18-1/2" clearance between the worksurface and the bottom of the shelf. The flipper door opening is 13" high with the door recessed on top of the cabinet.

Overhead storage units for height-adjustable worksurfaces must be used with the specially-designed worksurfaces for use with overheads. This worksurface has cutouts on each side to allow the top to raise and lower without interfering with the overhead cabinet. Adjustable-height overheads attach to the outside of the table legs. When the worksurface is at 29", the clearance between overhead and top is 18-1/2" (Figure 1).

Figure 1

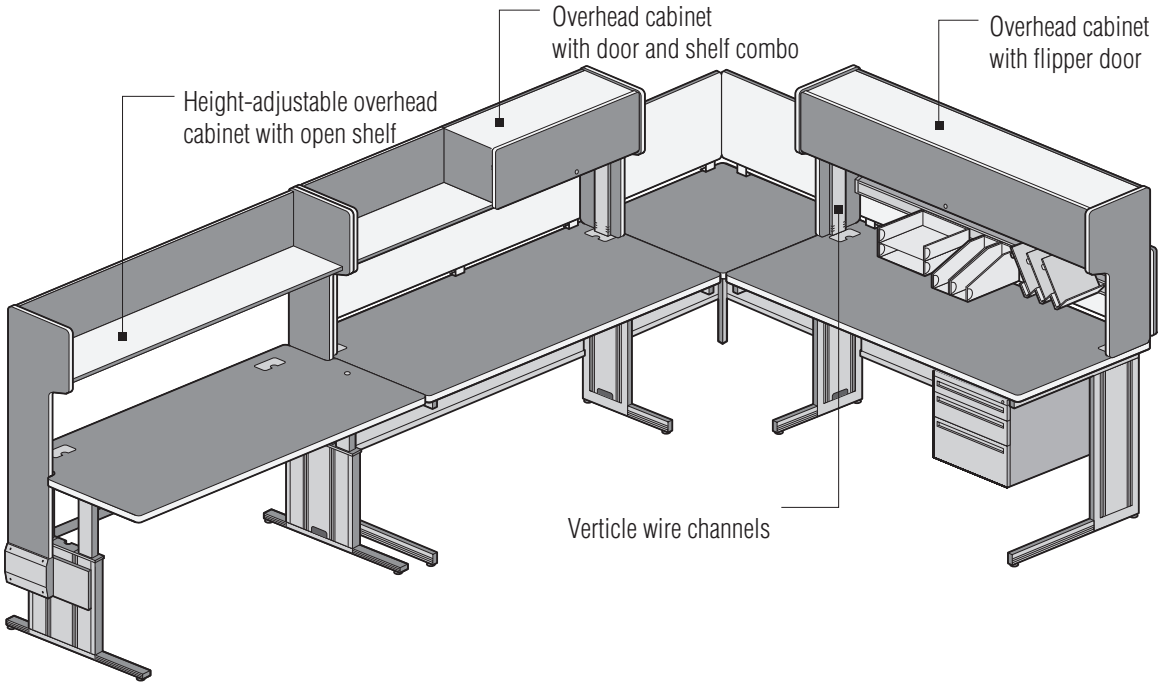

Overhead Cabinet with Flipper Doors

Overhead cabinets with flipper doors have solid core construction for backs and end panels with high-pressure laminate finishes, edges are finished with flat vinyl T-molding. Doors are available with high-pressure laminate or fabric surface and are random keyed or can be keyed-alike to match other overheads or pedestals. Key-alike items must be identified on your order. Units measuring 30" to 48" wide have a single door, while 54", 60" and 72" units have two doors. Overhead doors retrack on top of overhead cabinets.

Overhead Cabinet with Door and Shelf Combo

Overhead cabinet with door and shelf combo have the same construction and features as the flipper door units, except they are available with a door on one side and an open shelf on the other. Units are available in 60" and 72" widths only. Door position must be specified left or right.

Open Shelf

Open shelves have the same construction as flipper door cabinets only with open shelves. Units are available in the full range of sizes, 30" to 72" wide.

OVERHEAD STORAGE ACCESSORIES

XXI Notes offers a full range of accessories for use with overhead storage units. Task lights provide illumination for the worksurface and a paper management system adds organization to the area above the worksurface.

Task Lights

Task lights are offered in three levels of efficiency and cost. The standard light has a magnetic, high-power factor ballast with rapid start, cool-white T-8 fluorescent lamp. The energy efficiency model has an electronic ballast with rapid start, cool-white T-8 fluorescent lamp. The third model features a 2-step (hi/low) high-power factor ballast with rapid start, cool-white T-8 fluorescent lamp which helps reduce glare on computer screens and helps reduce eye strain.

Task lights attach to the underside of the shelf on overhead cabinets. Lights are UL Listed and available in the five trim colors. They are available 20" wide for use with 30" and 36" wide overhead cabinets, 32" wide for 42" and 48" wide units, and 44" wide for 60" and 72" wide units.

Shorter-length task lights can be used to permit the use of paper trays with hanging rails suspended from shelves. The following chart shows the task light length, quantity and type of trays that will fit on each size overhead:

Maximum Task Light Length to Accommodate Legal or Letter Tray with Hanging Rails	Overhead Width	One Set	Two Sets
	42"	20"	N/A
	48"	20"	N/A
	54"	32"	N/A
	60"	32"	20"
	72"	44"	20"

PAPER MANAGEMENT SYSTEM

The paper management system addresses the storage and movement of files, binders and documents. Components are available with integrated hooks for attachment to the work bar. The system is available in the five trim colors (Figure 2).

Figure 2

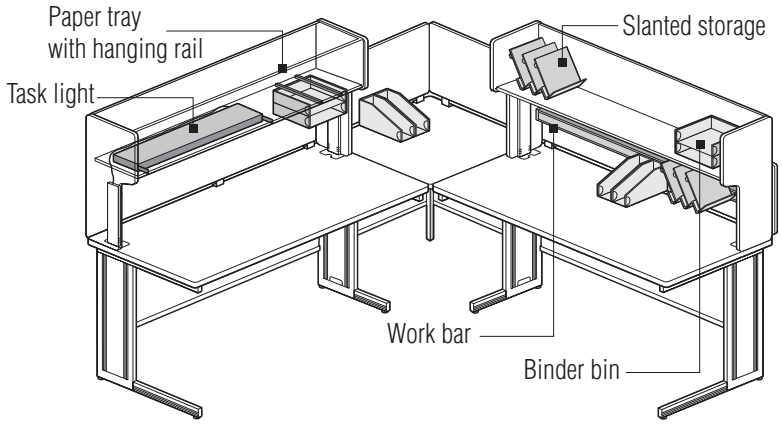

Work Bar

The work bar attaches between the end panels on overhead units. Specify work bar to match width of the supporting overhead. They are available 30", 36", 42", 48", 54", 60" and 72" wide in the five trim colors. Multiple combinations of paper management units may hang on the bar if their combined width is 8" less than the overall width of the bar specified. For example, a 48" wide work bar has 40" of mounting space.

Hanging Rails

Hanging rails are available for suspending letter or legal paper trays from the underside of overhead shelves. They are supplied in one-pair sets in the five trim colors. Hanging rails will occupy the same space as a task light unless a shorter length task light is used; see the chart under task lights for the proper application.

Paper Tray

The paper tray is available in two sizes to accommodate letter or legal size paper. The letter size tray is 3" high, 13-1/4" wide and 9-1/4" deep. The legal size is 16-1/4" wide, with the same height and depth as the letter tray. Trays may be suspended from the work bar or hanging rails, or used freestanding on worksurfaces and shelves. Individual trays can be stacked. The units include ID clips for easy recognition of materials.

Slanted Storage

Slanted storage is used freestanding or suspended from the work bar. These units may be used for departmental mail sorting or individual workstation organization. The three steel dividers, with ID clips, can be positioned to the left or right. Units are 7-3/4" high, 10-1/2" wide and 12-1/2" deep.

Binder Bin

The binder bin is used freestanding or suspended from the work bar. Bins are used for vertical storage of binders. Units are 9-1/2" high, 5" wide and 12-1/4" deep. ID clips are included.

PRIVACY SCREENS

Privacy screens provide sit-down privacy within the XXI Notes workstation. Screens are 19" high and available in widths to fit all basic and transitional worksurfaces, straight, corner, with or without keyboard pad. They may also be mounted to manual height adjustable worksurfaces.

Screens are fabric-covered and can be used as a tackable surface. The fabric surface on both sides allows one set of screens to serve two worksurfaces placed back-to-back. Privacy screens can be used on worksurfaces with overhead storage units to close the opening between the worksurface and the bottom of the shelf. Screens include mounting brackets and alignment plates to provide secure mounting. Corner screens include a corner alignment plate. Screens are available in configurations to match the worksurface application — basic worksurface, corner worksurface or transitional worksurface (Figure 1).

Figure 1

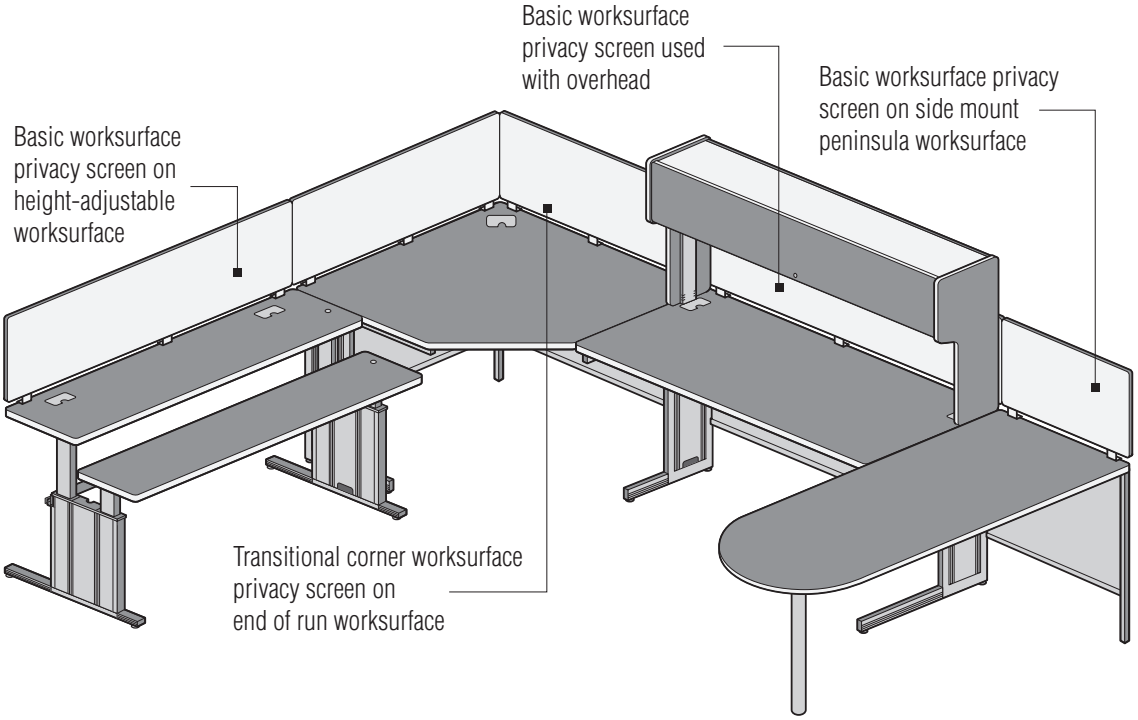

Basic Worksurface Privacy Screens

Basic worksurface privacy screens are designed for straight line applications. They include mounting brackets for attachment to the worksurface and a full-height, steel splice plate to align adjoining screens. Screens are available for straight applications in 30", 36", 42", 48", 54", 60" and 72". The 60" and 72" consist of a pair of screens, two 30" and two 36" with splice plates.

Corner Worksurface Privacy Screens

Corner worksurface privacy screens are available as a pair of screens to enclose the corner. They have a 90° splice plate to align the screens. Corner screens are available for 36", 42" and 48" corner worksurfaces. If the application requires only one side of the corner to have a screen, you may specify a straight 36", 42" or 48" screen to match the length required.

Transitional Worksurface Privacy Screens

Transitional worksurface privacy screens are offered in sizes and combinations of screens to enclose the corner occupied by a particular transitional worksurface — corner, square, rectangle and triangle. The end of run transitional worksurface uses a corner screen if both sides are to be screened or specify a straight screen to match just one side. To screen the width of a peninsula worksurface used in a side or center mount application you would specify a 30" straight screen.

WORKSURFACES

The layout and design of a XXI Notes w orkstation is the same as any other system furniture. You start with the primary worksurface and from there you add secondary and tr ansitional worksurfaces to build the shape of the workstation.

When specifying XXI Notes wor ksurfaces it is impor tant to deter mine the primary worksurface. All other worksurfaces will be specified based on their relationship to the pr imary worksurface. The primary worksurface is the major work area and is deter mined by its size, height, width and depth to be the largest worksurface in the workstation. Special attention should be taken in specifying the w orksurfaces. The unique ability to specify the type and placement of the wor ksurface legs adds flexibility to the w orkstation. The following workstation layouts show how to specify the most common applications and where to specify transitional legs:

Figure 1

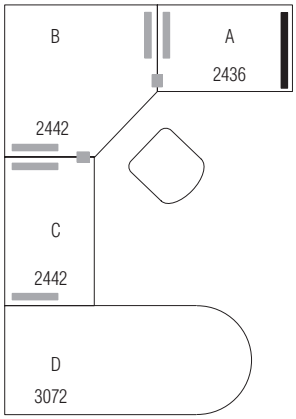

Figure 1 shows a workstation with all the same height w orksurfaces and is specified as follows:

A) Basic worksurface 24" deep x 36" wide with a left transitional leg
B) Freestanding corner 24" deep x 42" wide with both transitional legs
C) Basic worksurface 24" deep x 42" wide with both transitional legs
D) A side mount Peninsula worksurface

Note: Transitional worksurfaces are furnished with splice plates. When utilizing transitional legs on basic freestanding worksurfaces that are adjoining, optional splice plates are required to add support and attach tables together.

Figure 2

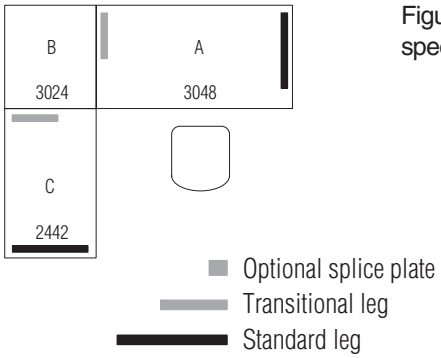

Figure 2 is a wor kstation with all the same height w orksurfaces and is specified as follows:

A) Primary basic worksurface 30" deep x 48" wide with a left transitional leg
B) Rectangle transitional worksurface with left transition direction due to being positioned to the left of the primary worksurface
C) Basic worksurface 24" deep x 42" wide with a right transitional leg

Figure 3

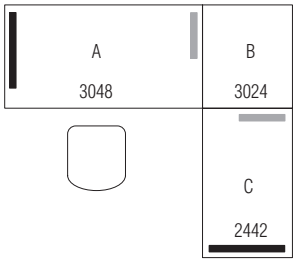

Figure 3 is the right-hand version of Figure 2 and w ould be specified as follows:

A) Primary basic worksurface 30" deep x 48" wide with a right transitional leg
B) Rectangle transitional worksurface with right transition direction due to being positioned to the r ight of the primary worksurface
C) Basic worksurface 24" deep x 42" wide with a left transitional leg

WORKSURFACES

Figure 4

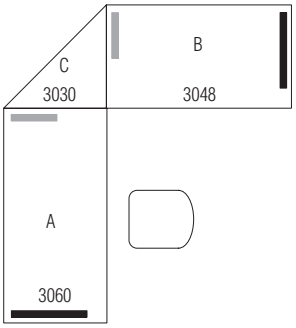

Figure 4 is a workstation with all the same height worksurfaces and is specified as follows:

A) Primary basic worksurface 30" deep x 60" wide with a right transitional leg
B) Basic worksurface 30" deep x 48" wide with a left transitional leg
C) Triangle transitional worksurface with no transition direction needed to be specified

Figure 5

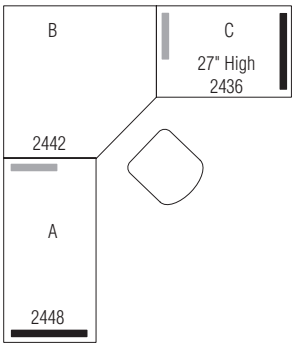

Figure 5 is a workstation with different height worksurfaces and is specified as follows:

A) Primary basic worksurface 24" deep x 48" wide x 29" high with a right transitional leg
B) Corner transitional worksurface with right transition direction due to being positioned to the right of the primary worksurface and is also specified with a “97” to signify the drop from 29" to 27" in height
C) Basic worksurface 24" deep x 36" wide x 27" high with a left transitional leg

Figure 6

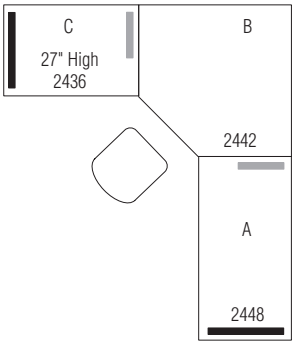

Figure 6 is the right-hand version of Figure 5 except the basic rectangular worksurfaces are the same size but different heights and would be specified as follows:

A) Primary basic worksurface 24" deep x 48" wide x 29" high with a left transitional leg
B) Corner transitional worksurface with left transition direction due to being positioned to the left of the primary worksurface and is also specified with a “97” to signify the drop from 29" to 27" in height
C) Basic worksurface 24" deep x 36" wide x 27" high with a right transitional leg

BASIC WORKSURFACES

Worksurfaces shall define the shape of the workstation and provide support for overhead storage, hanging pedestals, electrical componentry and privacy screens. Worksurfaces shall be designed to integrate function and ergonomics to provide solutions that meet ANSI/HFS 100-1988 and ADA user requirements.

Worksurface tops shall be 1-1/4" solid core with high-pressure laminate surface. The laminate on corner and keyboard corner worksurfaces shall run diagonally, paralleling the front edge. Tops shall be available with flat vinyl T-molded edges or 3mm vinyl edges in a choice of five edge colors.

Worksurfaces shall be supported by a heavy-gauge, seam-welded tubular steel frame and two welded steel legs joined by a steel modesty panel. Legs and modesty panels shall be color-matched and available in the five trim colors. Internal vertical raceways with hinged doors shall be located on the inside of each leg to provide for easy wire management from the floor to the worksurface. Legs shall be equipped with adjustable chrome-plated glides to compensate for uneven floors. Separate caster kits shall be available that include four casters, two with locks. Casters, used only on unit without overheads, shall add 2" to the height of the worksurface.

Legs shall be available in two depths, standard and transitional. Transitional legs shall be six inches shorter in depth than the standard leg. This shall allow for more clearance for feet and chair movement where worksurfaces join in a straight line or corner applications.

Rectangular Worksurfaces
Basic rectangular worksurfaces shall include two wireway grommets, located in the back corners of each worksurface. Grommets shall be color-matched to the worksurface laminate trim color. The modesty panels shall have two wire management ports located in the top outside edge of each panel. An optional wireway trough for wire management shall be located at the top of the modesty panel.

Worksurfaces shall be available in 30", 36", 42", 48", 54", 60" and 72" widths and 24" and 30" depths. They shall be available in 27" and 29" heights.

Stand-up Worksurface
Stand-up worksurfaces shall have the same features as the rectangular worksurface, but shall be available in one size; 30" deep by 36" wide by 42" high with the standard depth legs.

Stand Alone Corner Worksurface
Stand alone corner worksurfaces shall have the same basic construction as the rectangular worksurfaces. The stand alone corner worksurface shall be used where a freestanding corner worksurface is needed. Worksurfaces shall be available 36" or 42" wide by 24" deep and 48" wide by 30" deep. They shall be available in 27" and 29" heights.

Rectangular Adjustable Keyboard Pad Worksurfaces
Rectangular adjustable keyboard pad worksurfaces shall have the same construction features as the basic worksurface except for the addition of the 10" by 24" keyboard pad. The pads shall have a 3" height adjustment, a tilt range of 15° positive and 15° negative, and 1" forward extension. Worksurfaces shall be available in 30", 36", 42", 48", 54", 60" and 72" widths and 24" and 30" depths. They shall be available in 27" and 29" heights. Rectangular adjustable keyboard pad worksurfaces are available with the keyboard pad located left, right or center on widths of 48", 54", 60" and 72". The 36" and 42" wide worksurfaces shall be available with the keyboard pad located in the center position only.

Corner Adjustable Keyboard Pad Worksurfaces
Corner adjustable keyboard pad worksurfaces shall provide a fixed-height worksurface with the 10" by 24" adjustable keyboard pad where a freestanding corner worksurface is needed. Worksurfaces shall be available 42" wide by 24" deep and 48" wide by 30" deep. The corner worksurface shall be available with 27" and 29" high standard depth legs.

TRANSITIONAL WORKSURFACES

Transitional worksurfaces shall be available to connect two basic worksurfaces together to form a corner, or to end a run of basic worksurfaces. Transitional worksurfaces shall make the transition around corners and rely on fixed-height basic worksurfaces for their support.

Transitional worksurfaces shall have full wrap modesty panels and 1-1/4" solid core tops with high-pressure laminate surface. Hardware shall be included for attachment to adjoining worksurfaces for the condition specified. For same height installations, two splice plates shall be provided; for 29" to 27" installations, a splice plate and "Z" bracket shall be provided.

Corner Transitional Worksurface
Corner transitional worksurfaces shall be available in three sizes: 36" or 42" wide by 24" deep and 48" wide by 30" deep. They shall be available in 29" to 29", 29" to 27" and 27" to 27" heights. They shall include a " square tubular corner support leg with a stainless steel adjustable glide and full wrap modesty panels with wire management ports located in the top center of each panel. Transitional tops shall attach to fixed-height basic worksurfaces at the worksurface. The modesty panels shall attach to the legs of the adjoining basic worksurface to provide a full wrap finished appearance. Tops shall be available in the same construction and finishes as basic worksurfaces and shall include one grommet located in the back corner.

Corner Keyboard Pad Transitional Worksurface
Corner keyboard pad transitional worksurfaces shall have the same construction and features as the corner transitional worksurface with the addition of the 10" by 24" keyboard pad. The pads shall have a 3" height adjustment, a tilt range of 15° positive and 15° negative, and 1" forward extension. Worksurfaces shall be available in two sizes: 42" wide by 24" deep and 48" wide by 30" deep. They shall be available in 29" to 29", 29" to 27" and 27" to 27" heights.

Square Transitional Worksurface
Square transitional worksurfaces shall be available as 24" or 30" square units and shall be used with matching-depth fixed-height basic worksurfaces to fill in a corner. Worksurfaces shall include a " square tubular corner support leg with a stainless steel adjustable glide and full wrap modesty panels with wire management ports located in the top outside corner of each panel.

Rectangle Transitional Worksurface
Rectangle transitional worksurfaces shall be 24" by 30" and used to match a 24" deep fixed-height basic worksurface with a 30" deep worksurface at a corner. Worksurfaces shall include a 7/8" square tubular corner support leg with a stainless steel adjustable glide and full wrap modesty panels with wire management ports located in the top outside edge of each panel.

Triangle Transitional Worksurface
The triangle transitional worksurface shall join two 30" deep fixed-height basic worksurfaces to form a diagonal corner. The full width modesty panel shall attach to the support legs of the adjoining worksurfaces.

End of Run Transitional Worksurface
End of run transitional worksurfaces shall be available in three sizes: 36" by 36", 42" by 42" and 48" by 48". The 36" and 42" worksurface units shall attach to 24" deep worksurfaces and the 48" unit shall attach to 30" deep worksurfaces. Worksurfaces shall include an end support leg, a 7/8" square tubular corner support leg with a stainless steel adjustable glide and full wrap modesty panels with wire management ports located in the top center of each panel.

End of Run Transitional Keyboard Pad Worksurface
End of run transitional keyboard pad worksurfaces shall have the same construction and features as the end of run transitional worksurface with the addition of the 10" by 24" keyboard pad. The pads shall have a 3" height adjustment, a tilt range of 15° positive and 15° negative, and 1" forward extension. Worksurfaces shall be available in 42" by 42" and 48" by 48" with the 42" surface matching the depth of a 24" deep fixed-height basic worksurface and the 48" surface matching the 30" deep.

Conference End Transitional Worksurface
The conference end worksurface shall be 42" in diameter with a single 3" diameter steel tubular leg. The worksurface shall attach to the end of a 29" high, 30" deep worksurface.

Peninsula Transitional Worksurface
Peninsula worksurfaces shall be available 29" high, 30" deep by 48", 60" or 72" wide with flat vinyl T-edge. Worksurfaces shall include a 3" diameter steel tubular leg and hardware to install in the mounting configuration specified; end, side or center mounted. Side and center mount peninsula worksurfaces shall have modesty panels. A wire management port shall be located in the center at the top of each modesty panel.

MANUAL HEIGHT-ADJUSTABLE WORKSURFACES

Manual height-adjustable worksurfaces shall be available with single or dual tops that shall be the same construction and finishes as the basic worksurfaces. Height adjustment shall be 23" to 34" and shall be obtained by a chain-driven sprocket at a rate of one-inch per eight turns of the worksurface-mounted height control knob. The height adjustment control shall be specified for location on the left or right of the worksurface for the operator's convenience. Wire management shall be provided by an integral channel mounted between the lower leg assembly, or by an optional wireway mounted under the worksurface. Optional modesty panels shall attach to the worksurface to conceal an area 7" below the worksurface. Legs shall be equipped with adjustable chrome-plated glides, or optional caster kits shall be available that include four casters, two with locks. Casters shall add 2" to the height of the worksurface.

Single Rectangular Adjustable Worksurface
Single rectangular adjustable worksurfaces shall be a single rectangular top in two depths and seven widths. The 30" to 42" wide tops shall have one grommet located in the back center, and the 48" to 72" wide worksurfaces shall have two grommets, one in each back corner. Worksurfaces shall be available in 30", 36", 42", 48", 54", 60" and 72" widths, and 24" and 30" depths.

Single Rectangular Adjustable Worksurface for Overheads
Single rectangular adjustable worksurfaces for overheads shall have clearance cut-outs on each side for mounting the overhead cabinets and shelves that shall be designed to attach to the base of these worksurfaces. Worksurfaces shall have the same grommet options as the single rectangular adjustable worksurfaces. Worksurfaces shall be available in 30", 36", 42", 48", 54", 60" and 72" widths, and 24" and 30" depths.

Single Corner Adjustable Worksurface
Single corner adjustable worksurfaces shall have a single top in two depths and two widths. The 42" worksurface shall have 24" sides that shall match the depth of 24" deep basic worksurfaces. The 48" worksurface sides shall match the 30" deep basic worksurfaces. A single grommet shall be located in the rear corner.

Dual Rectangular Adjustable Worksurface
Dual rectangular adjustable worksurfaces shall have two adjustable surfaces — a keyboard surface that shall be 11-1/2" deep and a rear surface that shall be 17-1/2" deep. The 30" to 42" wide rear surfaces shall have one grommet located in the back center, and the 48" to 72" wide rear surfaces shall have two grommets, one in each back corner. Worksurfaces shall be available in 30", 36", 42", 48", 54", 60" and 72" widths, and 30" depth.

Dual Corner Adjustable Worksurface
Dual corner adjustable worksurfaces shall have two adjustable surfaces in two depths and two widths. The 42" tops shall have sides that match the depth of 24" deep basic worksurfaces and the 48" tops shall have sides that match the 30" deep basic worksurfaces. The 42" units shall have a 13 1/2" deep keyboard and a 31" deep rear surface. The 48" units shall have a 17-1/2" deep keyboard and a 35-3/4" deep rear surface. A single grommet shall be located in the rear corner.

Dual Slide/Tilt Rectangular Adjustable Worksurface
Dual slide/tilt rectangular adjustable worksurfaces shall have two adjustable surfaces — a keyboard surface that shall be 11-1/2" deep and a rear surface that shall be 17-1/2" deep. The front keyboard shall be 22" wide, shall have a tilt range of 15° positive and 15° negative and 5" of forward and back travel. The 30" to 42" wide rear surfaces shall have one grommet located in the back center. The 48" to 72" wide rear surfaces shall have two grommets, one in each back corner. Worksurfaces shall be available in 36", 42", 48", 54", 60" and 72" widths, and 30" depth.

Dual Slide/Tilt Corner Adjustable Worksurface
Dual slide/tilt corner adjustable worksurfaces shall include two adjustable surfaces, in two depths and two widths. The 42" tops shall have sides that match the depth of 24" deep basic worksurfaces. The 48" tops shall have sides that match the depth of 30" deep basic worksurfaces. The 42" units shall have a 13-1/2" deep keyboard and a 31" deep rear surface. The 48" units shall have a 17-1/2" deep keyboard and a 35-3/4" deep rear surface. The front keyboard shall be 22" wide and shall have a tilt range of 15° positive and 15° negative, and 5" of forward and back travel. A single grommet shall be located in the rear corner.

ELECTRICALLY HEIGHT-ADJUSTABLE WORKSURFACES

Electrically height-adjustable worksurfaces shall have two levels of adjustability. A single center pedestal shall adjust the worksurface height or double pedestals shall provide independent adjustability for front and rear worksurfaces. The standard AC motor shall provide 250 pounds of lift. Optional lift capacities shall be available on special order. The electronic control for adjusting the worksurfaces shall be located under the front edge of the worksurface and shall be field-changeable from right to left for easy access. Electrically adjustable units shall have the worksurfaces undersized by 1" on both sides and rear for proper clearance during operation.

SINGLE PEDESTAL ELECTRICALLY HEIGHT-ADJUSTABLE WORKSURFACES

Single Rectangular Electrically Height-Adjustable Worksurfaces
Single rectangular adjustable worksurfaces shall have a single rectangular top. The 34" to 40" wide tops shall have one grommet located in the back center, and the 46" to 58" wide worksurfaces shall have two grommets, one in each back corner. Worksurfaces shall be available in 34", 40", 46", 52" and 58" widths and 29" depth.

Single Corner Electrically Height-Adjustable Worksurfaces
Single corner adjustable worksurfaces shall have a single top in two depths and two widths. The 40" top shall have 23" sides for use with 24" deep Basic Worksurfaces and the 46" worksurface shall be used with 30" deep Basic Worksurfaces. A single grommet shall be located in the rear corner.

Dual Rectangular Electrically Height-Adjustable Keyboard Worksurfaces
Dual rectangular adjustable worksurfaces shall have two adjustable surfaces — a keyboard surface that shall be 11-1/2" deep and a rear surface that shall be 16-1/2" deep. The single pedestal shall adjust the overall height of the unit and the keyboard shall adjust with a keyboard mechanism. The keyboard mechanism shall provide a height adjustment range from 21" to 47" and shall have a tilt range of 15° positive and 15° negative. The 34" to 40" wide rear surfaces shall have one grommet located in the back center. The 46" to 58" wide rear surfaces shall have two grommets, one in each back corner. Worksurfaces shall be available in 34", 40", 46", 52" and 58" widths, and 29" depth.

Dual Corner Electrically Height-Adjustable Keyboard Worksurfaces
Dual corner adjustable worksurfaces shall have two adjustable surfaces — a keyboard surface and a rear surface. The single pedestal shall adjust the overall height of the unit and the keyboard shall be adjusted with a keyboard mechanism. The keyboard mechanism shall provide a height adjustment range from 21" to 47" and shall have a tilt range of 15° positive and 15° negative. The 40" top shall have 23" sides for use with 24" deep worksurfaces, a keyboard surface that shall be 11" deep and a rear surface that shall be 24" deep. The 46" top shall have 29" sides for use with 30" deep worksurfaces, a keyboard surface that shall be 14" deep and a rear surface that shall be 29-1/2" deep. A single grommet shall be located in the rear corner.

DOUBLE PEDESTAL ELECTRICALLY HEIGHT-ADJUSTABLE WORKSURFACES

Dual Corner Electrically Height-Adjustable Worksurface
Dual corner adjustable worksurfaces shall have two adjustable surfaces, in two depths and two widths. The double pedestals shall adjust the overall height of each surface independently. The 40" tops shall have 23" sides for use with 24" deep worksurfaces and a front surface that shall be 17-1/4" deep and a rear surface that shall be 18" deep. The 46" tops shall have 29" sides for use with 30" deep worksurfaces, a front surface that shall be 25-5/8" deep and a rear surface that shall be 18" deep. A single grommet shall be located in the rear corner.

The double pedestal dual corner adjustable worksurfaces shall be available in two different models with these features:

1. Height adjustable.
2. Height adjustable with rear sliding surface. Surface shall slide 13" forward.

XXI NOTES WITH POWERUP™

PowerUp shall be a three-part system that shall consist of a power/data module, a wire management system and an eight-wire four-circuit electrical distribution system. PowerUp shall be offered in five levels which shall include individual parts of the system or combinations of the parts to custom tailor a workstation. PowerUp shall be offered with basic rectangular worksurfaces and rectangular adjustable keyboard pad Worksurfaces.

The Power/Data Module
The power/data module shall have a flip-up cover that locks in place for access to a 110-volt duplex receptacle and two AT&T brand, Type “M” ports. Other brands and types of connectors can be incorporated into the system. However, all brands of connectors must be ordered separately from a third-party source. Power shall be supplied by a power cord with a 3-prong plug. The cord shall be 22" long when used with level five tables and 108" long when used with level one and level three tables.

The Wire Management System
The wire management system shall attach under the worksurface between the table legs. It shall have a data door containing a steel divider that shall separate power and data cables, a table-to-table steel wireway and a splice plate. Notched vertical wireways on the legs shall pass cables through to the next table.

The Eight-Wire Four-Circuit Electrical Distribution System
The eight-wire four-circuit electrical distribution system shall attach to the underside of the worksurface for level 4 and 5 powerup applications. The 30" to 54" wide worksurface harness shall accommodate two, 15 amp duplex receptacles and the 60" and 72" wide worksurface harness shall accommodate up to four 15 amp duplex receptacles.

Receptacles shall be available to access the four circuits within the harness. They shall be marked for the circuit they will access, circuits 1, 2 and 3 shall be convenience circuits and shall share a common neutral and ground. They shall be black only. Circuit 4 shall be a dedicated circuit and shall have its own neutral and ground. Circuit 4 shall be identified by its orange color.

Power shall be supplied to the distribution harness from a floor or wall source with the floor power infeed kit. The kit shall include 6' of plastic covered flexible metal conduit with a 1/2", 90° waterproof connector. Two steel covers shall be included to replace the existing plastic vertical wireways in the table leg.

Power is transferred from table-to-table with the eight-wire table-to-table connector. The 18" long connector shall plug into the ends of the distribution harnesses to continue power from table-to-table. A steel wireway and splice plate shall be included to shield the connector between tables .

Level One PowerUp
Level one PowerUp shall consist of the power/data module with a 108" power cord and a steel guard to protect the underside of each module. Worksurfaces 30" to 54" wide shall have one module located at the right rear of the worksurface. Worksurfaces 60" to 72" wide shall have two modules, one on each side at the rear of the worksurface.

Level Two PowerUp
Level two PowerUp shall have a wire management system that attaches under the worksurface between the table legs. It shall have a data door containing a steel divider that shall separate power and data cables, a table-to-table steel wireway and a splice plate. Notched vertical wireways on the legs shall pass cables through to the next table.

Level Three PowerUp
Level three PowerUp shall be a combination of levels one and two.

Level Four PowerUp
Level four PowerUp shall have the wire management system of level two plus the addition of the eight-wire four-circuit electrical system.

Level Five PowerUp
Level five PowerUp shall have all three elements of the powerup system — power/data module with 22" cord, the wire management system and the eight-wire four-circuit electrical system.

XXI NOTES PRINTER STANDS

XXI Notes shall offer two printer stands to meet a variety of needs. The basic printer stand shall match the basic rectangular worksurfaces for style and construction features. The universal printer stand shall offer infinite adjustability.

Basic Printer Stand
The basic printer stand shall have all the same features as the rectangular worksurface, but shall be available with only the flat vinyl T-molded edge. The top shall have a center slot for paper feed and an optional receiver basket that shall attach to the back of the worksurface. The receiver basket shall add 11" to the depth of the top.

Universal Printer Stand
The universal printer stand shall be a formed steel construction. It shall have front and back trays with three vertical adjustments and an adjustable frame top that shall accommodate printers up to 24" wide x 27 " deep. It shall be available in the five trim colors.

PEDESTAL STORAGE

Pedestal storage for XXI Notes shall be provided by UNICOR's The Opus Group pedestals. Three styles shall be available to meet personal storage requirements — freestanding, mobile and hanging pedestals.

Pedestals shall be available in three depths — 17-5/8" that may be used with any depth worksurface, 21-5/8" for maximum storage under a 24" worksurface and 27-5/8" for use under 30" worksurfaces.

The 12" file and 15" EDP drawer sizes shall have full-extension slide arm suspensions for full access to storage space. The 3" pencil drawers and 6" box drawers shall have three-quarter extension, steel ball-bearing suspension.

Locks shall be included in each pedestal and shall be random keyed. Specific keying combinations shall be available.

Freestanding Pedestals
Freestanding pedestals shall have a finished top and four adjustable glides. They shall be placed under a worksurface or anywhere else in the office. A counterbalance weight shall be available for freestanding units when not placed under worksurfaces.

Mobile Pedestals
Mobile pedestals shall have a finished top and four twin-wheel hooded casters. Front casters shall be locking and back casters shall be non-locking. A counterbalance weight shall be included with each unit.

Hanging Pedestals
Hanging pedestals shall have keyhole slots for attachment under basic worksurfaces.

Adjustable Storage Module
Adjustable storage modules shall attach to the leg of manual adjustable height worksurfaces. They shall be available in three styles: one file drawer, two box drawers or two pencil and one box drawer combination. Units shall be 15" wide, 17-5/8" deep and 13-5/16" high, and shall mount to the outside or inside of the leg.

Center Drawer
Center drawers shall be formed steel construction with a molded plastic compartment tray. Locks shall be included and shall be random keyed. Specific keying combinations shall be available. They shall attach under basic XXI Notes worksurfaces and shall be available in the five trim colors.

WORKSURFACE ACCESSORIES

XXI Notes shall offer a full-range of accessories to facilitate the use of computers in the workstation.

Articulating Keyboard with Mouse Pad
The fully adjustable articulating keyboard with mouse pad and wrist rest shall attach to the underside of basic corner or rectangular worksurfaces and transitional corner worksurfaces. They shall feature 7" vertical height adjustment and a tilt range of 0° to 20°. The keyboard tray shall swivel 359° and retract to store below worksurface. Three track lengths shall be available: 16", 17-3/4", and 20-3/4". The keyboard tray with wrist rest shall be 10-1/2" deep by 20" wide and the mouse pad shall be 9" diameter and shall be mounted to the left or right of the tray. They shall be available in black only (Figure 1).

Tilting Mouse Pad
Tilting mouse pads shall attach to the articulating keyboard with mouse pad. They shall feature a 9" diameter mouse pad and bracket assembly that shall permit the mouse pad to tilt and be mounted above the tray so it can be rotated for storage without removing the mouse. They shall have a neoprene surface and shall be available in black only (Figure 2).

CPU Sling
The CPU sling shall be designed for use with basic rectangular worksurfaces only. It shall attach to the underside of rectangular worksurfaces and accommodate a range of CPU's up to 65" in circumference and a maximum of 75 pounds. It shall provide 5-1/2" of front-to-back travel and 359° swivel for ease of accessibility. The CPU sling shall be available in black only.

CPU Holder
The CPU holder shall be designed for use with manual height-adjustable worksurfaces. It shall attach to the inside or outside of the worksurface leg and shall accommodate a range of CPU's from 4" to 8-1/4" thick. The holder shall be available in the five trim colors.

Turntable
Turntables shall rotate 360° to provide shared use of computer, keyboard or terminal screen. They shall have a laminate top with flat vinyl edge, and shall be available in two sizes: 15" by 18" and 20" by 24".

Manuscript Stand
The manuscript stand shall be height- and tilt-adjustable to hold materials so they can be easily referenced. Stands shall be freestanding so they may be placed anywhere on the worksurface.

OVERHEAD STORAGE

XXI Notes shall offer three styles of overhead storage units for use with basic rectangular worksurfaces and the same three styles with different end panels and mounting hardware for rectangular height-adjustable worksurfaces for overheads. They shall be available as a flipper door unit, a flipper door on one half and an open shelf on the other in 60" and 72" widths or as open shelves. Overheads for basic rectangular worksurfaces shall attach through the grommets in the top of the worksurface. They shall have vertical wire channels that conceal the attachment and wires from the top of the shelf to the worksurface.

Overhead cabinets shall be 34" high and shall have 18-1/2" clearance between the worksurface and the bottom of the shelf. The flipper door opening shall be 13" high.

Overhead storage units for height-adjustable worksurfaces shall be used with the specially designed worksurfaces for use with overheads. This worksurface shall have cutouts on each side to allow the top to raise and lower without interfering with the overhead cabinet. Adjustable-height overheads shall attach to the outside of the table legs. When the worksurface is at 29", the clearance between overhead and top shall be 18-1/2".

Overhead Cabinet with Flipper Doors
Overhead cabinets with flipper doors shall be a solid core construction for backs and end panels with high-pressure laminate finishes. Edges shall be finished with flat vinyl T-molding. Doors shall be available with high-pressure laminate or fabric surface and shall be random keyed or optional keyed-alike shall be available to match other overheads or pedestals. Units measuring 30" to 48" wide shall have a single door, while 54", 60" and 72" units shall have two doors.

Overhead with Door and Shelf Combo
Overhead with door and shelf combo shall be the same construction as the flipper door units, except shall be available with a door on one side and an open shelf on the other. Units shall be available in 60" and 72" widths only. Door position shall be specified left or right.

Open Shelf
Open Shelves shall be the same construction as flipper door cabinets but shall only have open shelves. Units shall be available in the full range of sizes, 30" to 72" wide.

OVERHEAD STORAGE ACCESSORIES

XXI Notes offers a full range of accessories for use with overhead storage units. Task lights provide illumination for the worksurface and a paper management system adds organization to the area above the worksurface.

Task Lights
Task lights shall be offered in three levels of efficiency and cost. The standard light shall have a magnetic high-power factor ballast with rapid start, cool-white T-8 fluorescent lamp. The energy efficiency model shall have an electronic ballast with rapid start, cool-white T-8 fluorescent lamp. The third model shall have a 2-step (hi/low) high-power factor ballast with rapid start, cool-white T-8 fluorescent lamp which shall help reduce glare on computer screens and help reduce eye strain.

Task lights shall attach to the underside of the shelf on overhead cabinets. Lights shall be UL Listed and available in the five trim colors. They shall be available 20" wide for use with 30" and 36" wide overhead cabinets, 32" wide for 42" and 48" wide units, and 44" wide for 60" and 72" wide units.

PAPER MANAGEMENT SYSTEM

The paper management system shall address the storage and movement of files, binders and documents. Components shall be available with integrated hooks for attachment to the work bar. The system shall be available in the five trim colors.

Work Bar
The work bar shall attach between the end panels on overhead units. They shall be available 30", 36", 42", 48", 54", 60" and 72" wide in the five trim colors. Multiple combinations of paper management units shall hang on the bar. The bar shall be epoxy powder-coated extruded aluminum. They shall be available in the five trim colors.

Hanging Rails
Hanging rails shall be available for suspending letter or legal paper trays from the underside of overhead shelves. They shall be supplied in sets in the five trim colors.

Paper Tray
The paper tray shall be available in two sizes to accommodate letter or legal size paper. The letter size tray shall be 3" high, 13-1/4" wide and 9-1/4" deep. The legal size shall be 16-1/4" wide, with the same height and depth as the letter tray. Trays shall suspend from the work bar or hanging rails, or used freestanding on worksurfaces and shelves. Individual trays shall be stackable. The units shall include ID clips for easy recognition of materials.

Slanted Storage
Slanted storage shall be used freestanding or suspended from the work bar. The three steel dividers, with ID clips, can be positioned to the left or right. Units shall be 7-3/4" high, 10-1/2" wide and 12-1/2" deep.

Binder Bin
The binder bin shall be used freestanding or suspended from the work bar. Bins shall provide for the vertical storage of binders. Units shall be 9-1/2" high, 5" wide and 12-1/4" deep. ID clips shall be included with units.

PRIVACY SCREENS

Privacy screens shall provide sit-down privacy within the XXI Notes workstation. Screens shall be 19" high and available in widths to fit all basic and transitional worksurfaces — straight, corner, with or without keyboard pad. They shall be mountable to manual height-adjustable worksurfaces.

Screens shall be fabric-covered and useable as a tackable surface. The fabric surface on both sides shall allow one set of screens to serve two worksurfaces placed back-to-back. Privacy screens shall be useable on worksurfaces with overhead storage units to close the opening between the worksurface and the bottom of the shelf. Screens shall include mounting brackets and alignment plates to provide secure mounting. Corner screens shall include a corner alignment plate. Screens shall be available in configurations to match the worksurface application — basic worksurface, corner worksurface or transitional worksurface.

Basic Worksurface Privacy Screens
Basic worksurface privacy screens shall be designed for straight-line applications. They shall include mounting brackets for attachment to the worksurface and a full-height, steel splice plate to align adjoining screens. Screens shall be available for straight applications in 30", 36", 42", 48", 54", 60" and 72" widths. The 60" and 72" widths shall consist of a pair of screens — two 30" and two 36" with splice plates.

Corner Worksurface Privacy Screens
Corner worksurface privacy screens shall be available as a pair of screens to enclose the corner. They shall have a 90° splice plate to align the screens. Corner screens shall be available for 36", 42" and 48" corner worksurfaces.

Transitional Worksurface Privacy Screens
Transitional worksurface privacy screens shall be offered in sizes and combinations of screens to enclose the corner occupied by a particular transitional worksurface corner, square, rectangle and triangle. The end of run transitional worksurface shall use a corner screen if both sides are to be screened.

U.S. Department of Justice

Federal Prison Industries, Inc.

PIEP500/OEI/1099

www.unicor.gov

(800) 827-3168

CATPIEP500A