CRESCENDO

Stackable-Tile System
Panel Installation Manual

UNICOR

TABLE OF CONTENTS

Frame Installation

OVERVIEW 1
REQUIRED TOOLS FOR ASSEMBLY 1
ASSEMBLING CORNER POSTS 2
ATTACHING HORIZONTALS TO VERTICALS 4
LEVELING 4
INSTALLING TILE HOOKS 5

Electrical Data Installation

RIGID WIREWAY INSTALLATION 6
HORIZONTAL JUMPER INSTALLATION 7
VERTICAL JUMPER INSTALLATION 7
DATA CABLING UNDER TOP CAP 10
DATA CABLING BEHIND ACOUSTIC TILES 10
DATA CABLING BEHIND RACEWAY TILES 12
DATA CABLING IN THE BASE RACEWAY 12
VERTICAL DATA CABLING 13
STORING EXTRA DATA CABLES INSIDE OF PANEL 13

Tiles

HANGING ACOUSTIC TILES 14
HANGING RACEWAY TILES 14
HANGING OPEN AND WINDOW TILES 15

Trim

INSTALLING TOP CAPS 16
INSTALLING END-OF-RUN CAPS 16
INSTALLING IN-LINE HEIGHT CHANGE TRIM 16
INSTALLING UNIVERSAL CORNER TRIM 17
INSTALLING UNIVERSAL HEIGHT CHANGE TRIM 17
INSTALLING FOUR-WAY LIGHT BLOCKS 17
INSTALLING BASE TRIM 17
TOP FEED INSTALLATION 18
BASE FEED INSTALLATION 18
RECEPTACLE BEZEL INSTALLATION 19

Reconfiguring

ADDING AND REMOVING HORIZONTALS 20
STACKING VERTICAL POSTS 21
ADDING INTERSECTIONS 21

Specification Guide **22**

OVERVIEW

Crescendo uses four basic parts to build the framework for the panels:

- full vertical post
- half vertical post
- horizontal rail
- 90° corner connectors

The vertical posts are used to create the height dimension of the panel. The horizontal rails are used to create the width dimension of the panel. The 90° connector blocks are used to make panel intersections.

Full vertical posts are used at straight in-line conditions and at end-of-runs. Half vertical posts are used along with the 90° connector block to make panel intersections.

REQUIRED TOOLS FOR ASSEMBLY

- Dead blow mallet
- 3/8" flat blade screwdriver
- #3 Phillips head screwdriver
- 3/16" allen wrench
- Diagonal pliers
- Utility knife
- 9/16" open end wrench

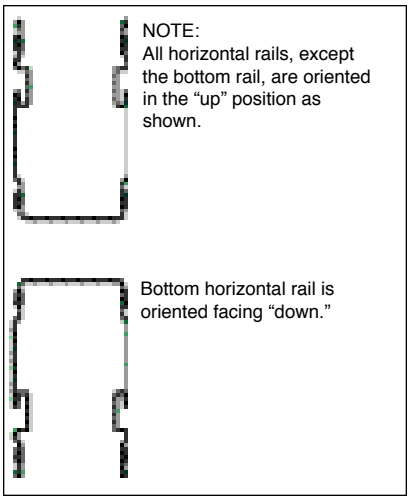

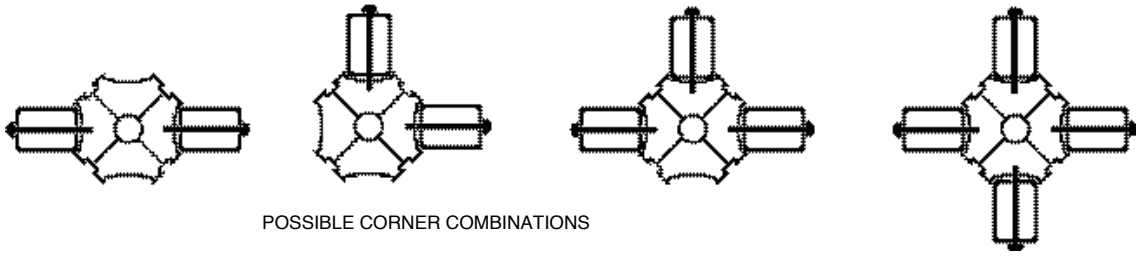

POSSIBLE CORNER COMBINATIONS

1. Refer to the space plan to build the necessary corner posts.

2. Corner posts are assembled by bolting two, three, or four half posts together using a 90° corner connector, shoulder bolts and a 3/16" allen drive. The diagram above demonstrates the possible configurations. All posts get one connector in the lowest hole and one connector in the highest hole. Taller posts use more than two connectors. See the chart below for more information.

90° CORNER CONNECTOR

NOTE: Position corner connectors at heights that avoid obstructing power and data cabling. Refer to the space plan for power and data locations.

3. Install variable height corner connectors (if required). Variable height corner connectors are used above the lowest vertical in a variable height intersection. Install one at the first set of holes above a height change and one at the top position of every post. The variable height corner connector is used to allow wire management between the top trough of panels in a variable height corner condition. For the correct number of corner connectors, refer to the chart on page 3.

VARIABLE HEIGHTCORNER CONNECTOR

PLACEMENT OF VERTICAL CONNECTORS	
Height of Panel or Height Difference Between Panels (in inches)	#of Connectors (Standard or Height Change)
6	1
12	1
18	2
24	2
30	2
36	2
42	3
48	3
54	3
60	3
66	3
72	4
84	4

ATTACHING HORIZONTALS TO VERTICALS

1. Refer to the space plan and start with a panel corner intersection building out in two directions so the panel frame is able to stand on its own.

2. Horizontals are used at the top and bottom of a panel to space the vertical posts apart the appropriate distance for the panel width you are building. One rail is used at the top of the panel with the opening facing upward and **one rail is used at the bottom facing downward**. Panels that are made up of more than one tile also use horizontals at intermediate heights (with the opening facing up).

3. Slide a horizontal into a vertical half post with the rivets above the embossed area on the post. Making sure all four rivets are lined up with the corresponding embosses, tap the horizontal into place with a dead-blow style mallet. Referring again to the space plan, position the appropriate vertical post (full or half post) relative to the horizontal and tap the horizontal into place. Repeat the above instructions, building out in a direction perpendicular to the first horizontal from the corner post. When this step is completed you should have a partially assembled 90° corner that can support itself. Position the lower horizontals relative to the lowest set of embossed areas on the vertical posts and tap into place with a dead-blow style mallet. Continue to add horizontals if required by the style of panel. Remember, only the bottom horizontal rails are installed with the opening facing downward. All other rails openings should face upward.

Warning: *Use care when tapping the horizontals in place to ensure that all rivets are sliding into the embossed areas of the post. Failure to engage all rivets into the post will compromise the strength of the frame and could possibly result in product failure.*

LEVELING

1. After building the first corner, level the panel frames by turning the post glides the appropriate direction.

2. Hint: Screw the glides out 1/2" on the first corner so you can adjust future panels up or down without having to adjust the first panels built.

3. NOTE: Glides can be adjusted by hand or by using a 9/16" open end wrench.

4. Continue building panels in this manner until the frames are complete.

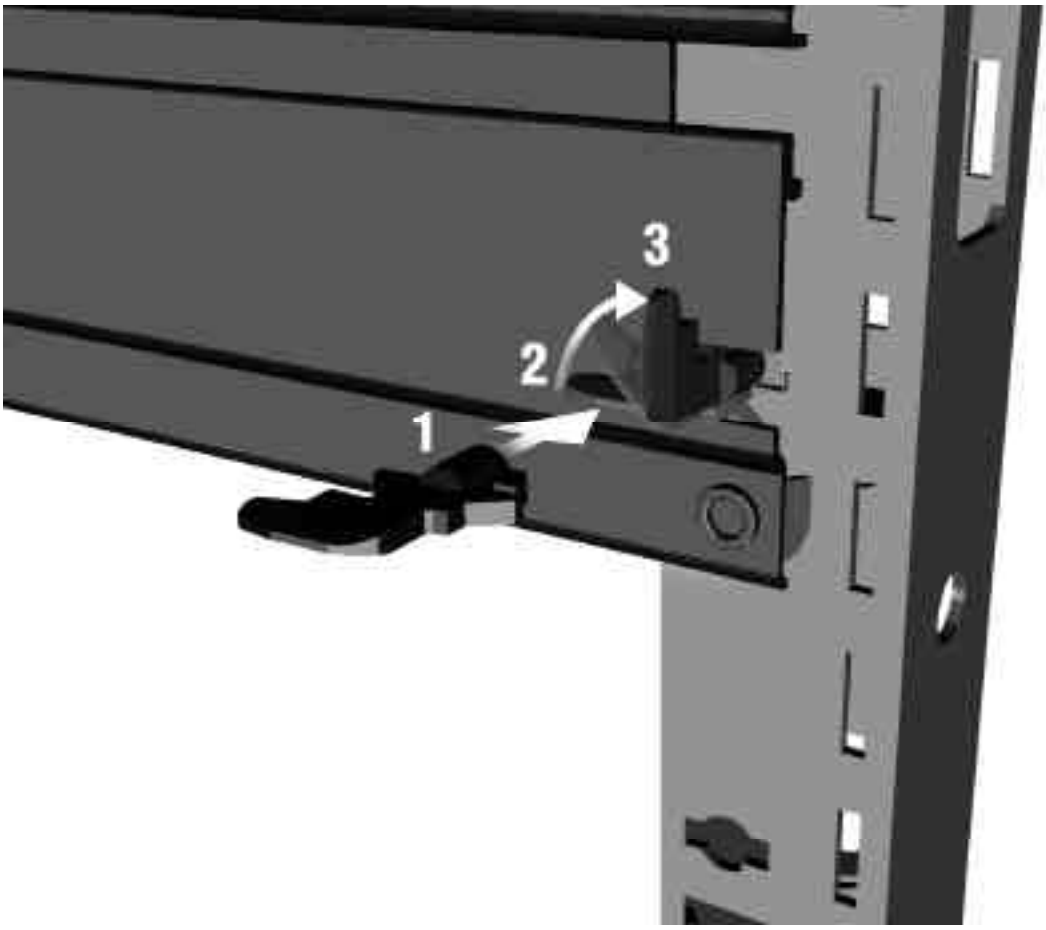

INSTALLING TILE HOOKS

1. Tile hooks are used to lock the horizontal in place relative to the vertical and provide a mounting location for the tiles. Four hooks need to be installed for every tile.

2. Tile hooks are inserted through the cutout in the end of the horizontal and vertical after the parts have been correctly installed and aligned. Insert the end of the hook through the cut-outs with the top of the hook pointing to the left. After the end of the hook is through the cut-outs, rotate the hooks one-quarter turn to the right so the top of the hook is pointing upward.

   If the tile hook does not turn properly, the horizontal has not been installed properly. Check to be sure the horizontal rivets are fully seated into the vertical post and that none of the rivets are outside of the embosses.

3. Note: On tiled panels, hooks are inserted in the cut-outs in the verticals just above the intermediate horizontals as well as through the cut-outs in the horizontal rails.

4. When all of the hooks are properly installed, there should be four hooks for each tile you are going to hang on the panel.

RIGID WIREWAY INSTALLATION

WARNING: Assembly of all mechanical frame components must be completed before making any electrical connections. All electrically interconnected furnishings shall also be mechanically interconnected.

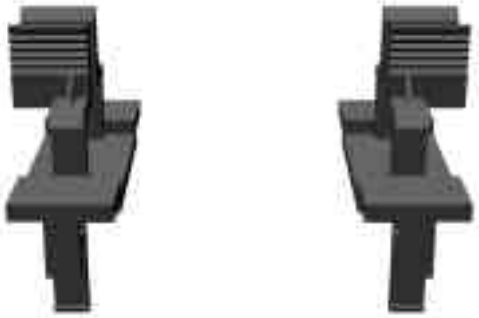

MOUNTINGBRACKETSORIENTATION

1. Rigid wireways are installed to horizontal rails using the mounting brackets provided. Rigid wireways hang off of the lowest rail (base power) and sit on top of rails at other heights (ADA, worksurface height, and standing height).

2. To install a rigid wireway, first snap the mounting brackets into the horizontal channel. Be sure the legs of the brackets engage the slots in the rail and the extended portion of the finger release tabs are pointed away from the center of the panel.

3. Check the space plan for the location of the power infeed, the rigid wireways are directional, the male terminals on the wireways must face toward the power infeed.

4. After the brackets are installed, **orient the wireway with the red stripe towards the top of the panel and the male terminals toward the power infeed.** Position the rigid wireway below the clips (base power) or above the clips (other height power) and push the wireway up (base power) or down (other height power) into the mounting brackets. Continue installing rigid wireways as required.

HORIZONTAL JUMPER INSTALLATION

1. Power is passed from panel to panel by using a horizontal jumper . Horizontal jumpers use oval conduit and come in two different lengths (17" & 21"). 17" jumpers are used on in-line conditions and inside 90° corners, 21" jumpers are used to pass straight through an intersection or around the outside of a 90° corner.

2. Jumpers run from the spades (male connectors) on one end of a rigid wireway to the tracking area on another rigid wireway on an adjacent panel.

3. To install a jumper, remove the red locking tabs, orient it between the two rigid wireways, ensure the red stripe on the jumper is lined up with the red stripe on the rigid wireway and securely push the connector into place and replace the red locking tab. To remove a jumper, squeeze the two release tabs on the jumper together and rotate the jumper out.

VERTICAL JUMPER INSTALLATION

1. Vertical jumpers are used to run power within a single panel between two different heights. There are two different vertical jumpers — the 53” long vertical jumper, which is capable of running power from the base to any other height within the panel, and the 23” short vertical jumper, which is used to run power between two adjacent heights (i.e., ADA height to worksurface height, or worksurface height to standing height).

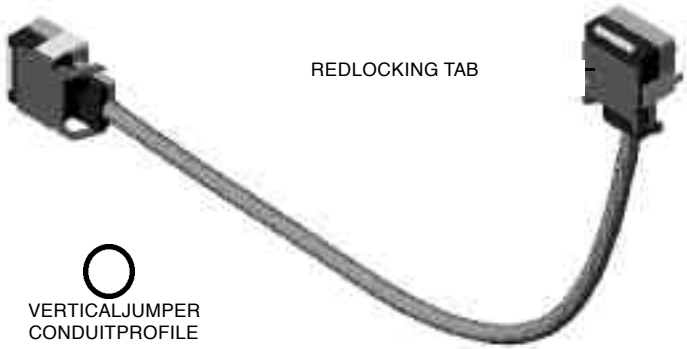

2. Vertical jumpers can only be run between the male terminals on one rigid wireway and the tracking area on the opposite end and side of the next wireway. Press the vertical jumper in the same manner as the horizontal jumper.

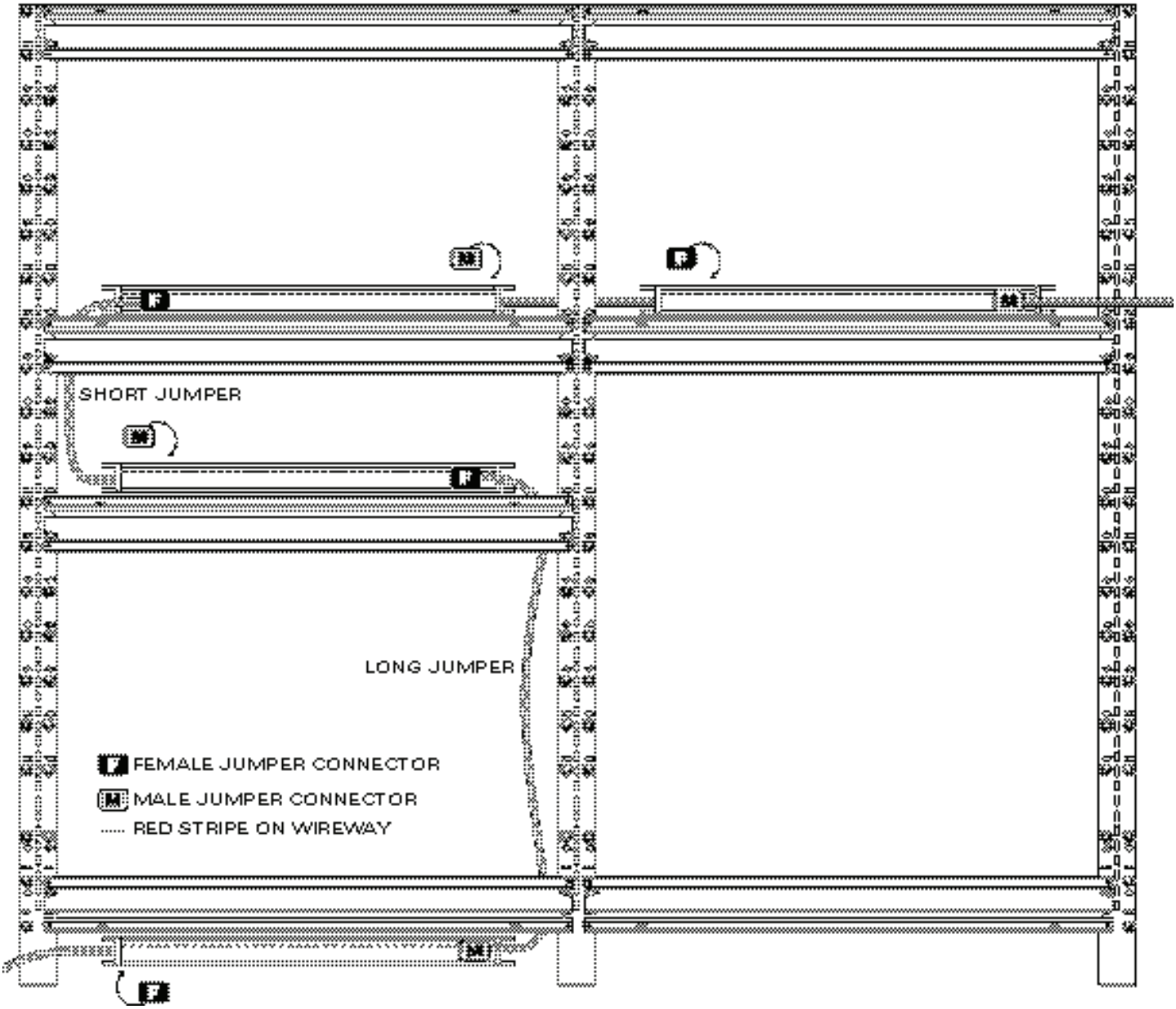

TYPICALRIGID WIREW AY AND JUMPER INSTALLATION

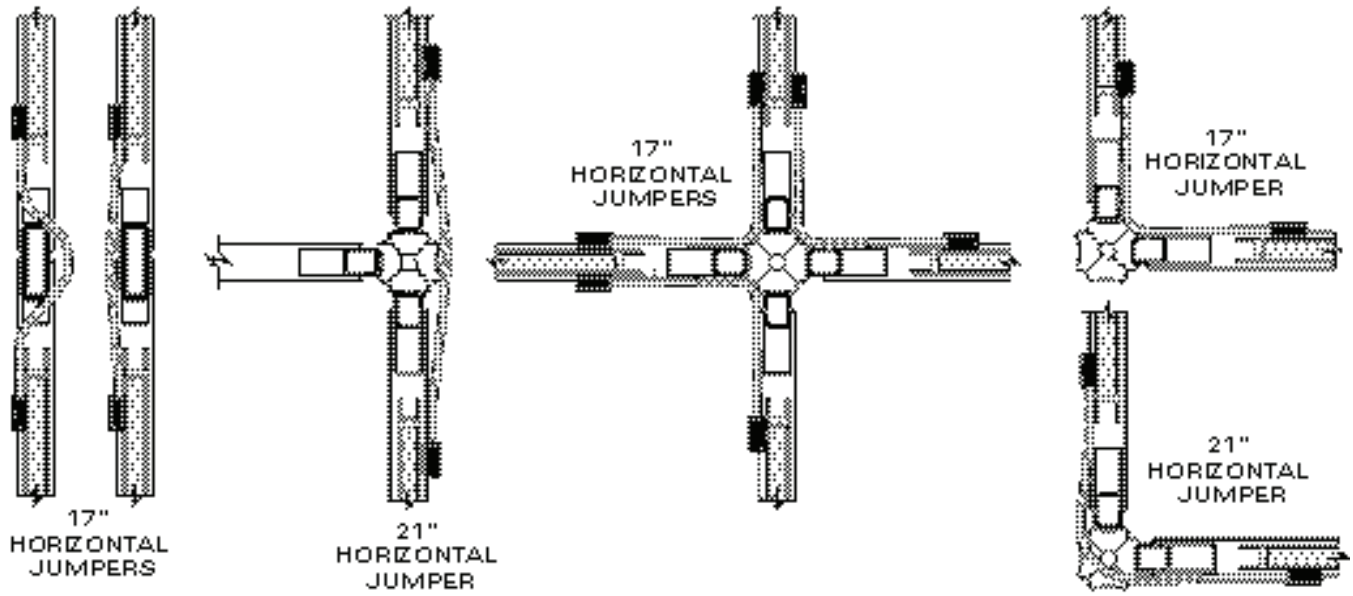

PREFERRED JUMPER INSTALLATIONS

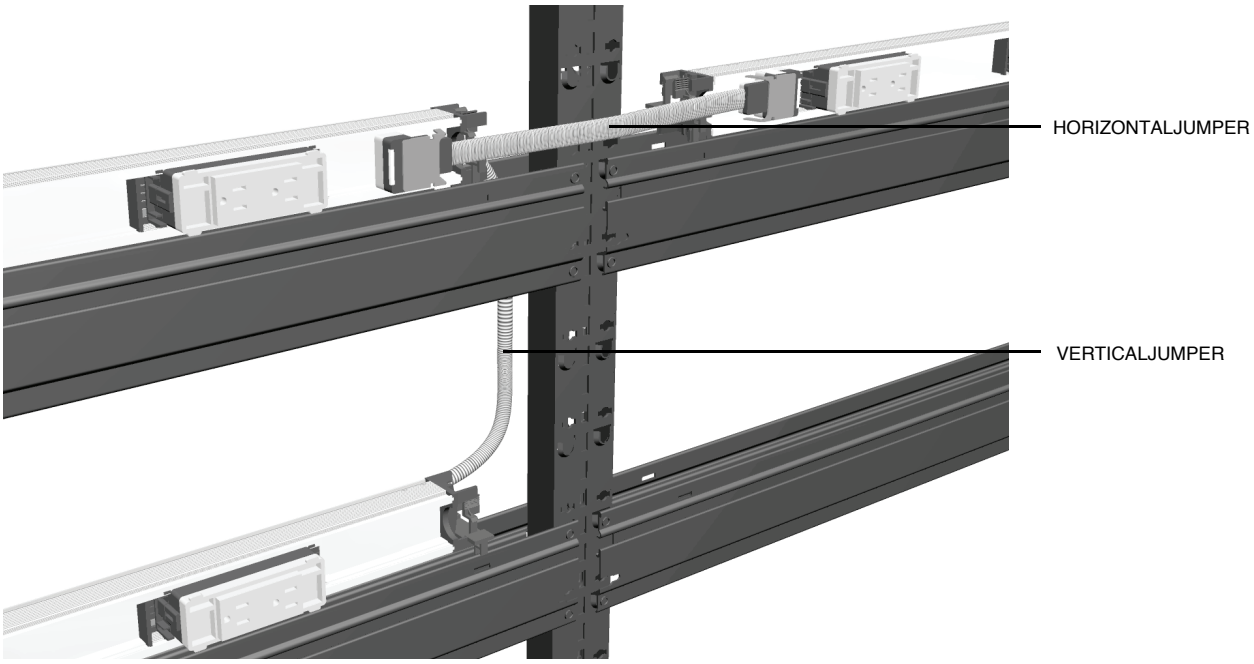

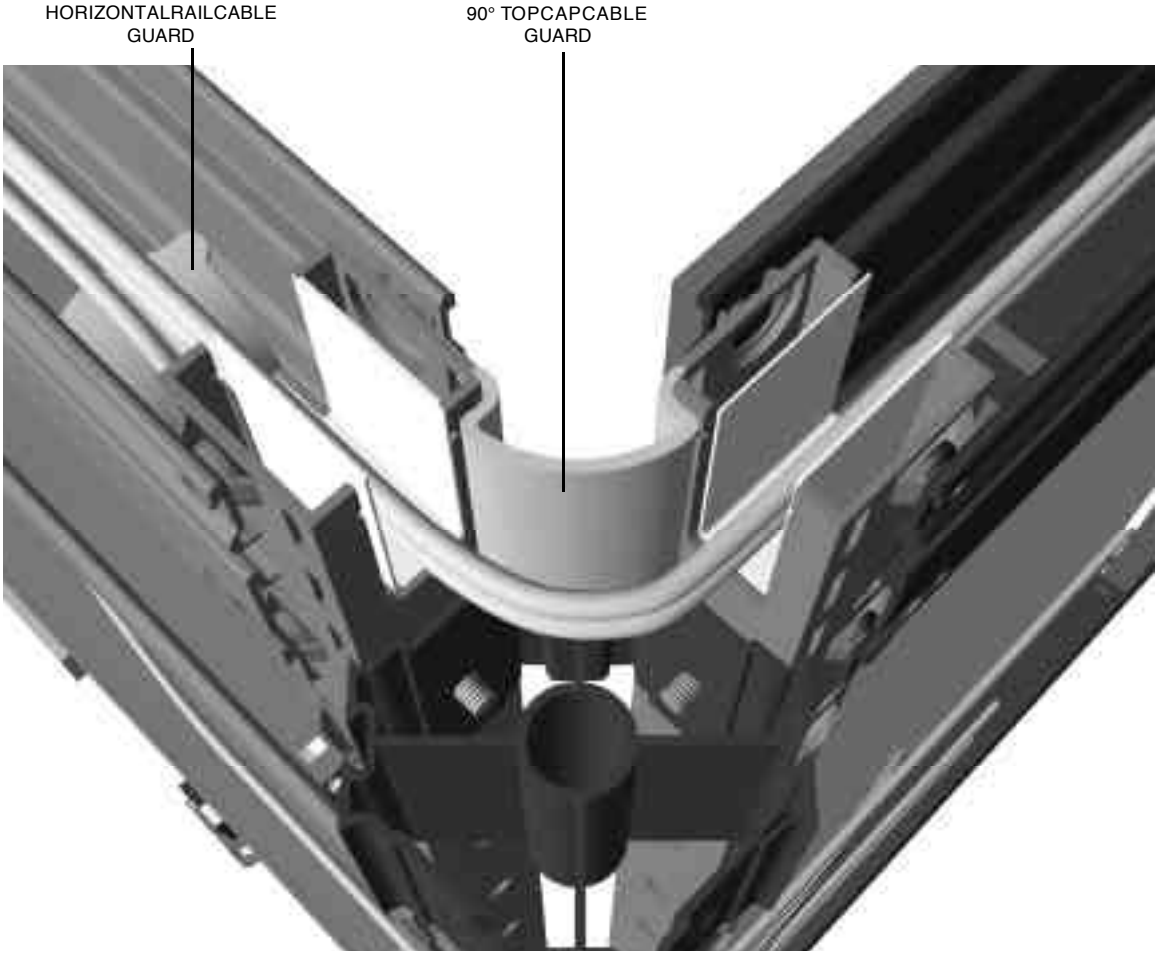

DATA CABLING UNDER TOP CAP

1. Data cabling can be laid in the trough contained under the top cap.

2. The optional 90° top cap cable guard can be slid in at 90° intersections to enforce a 1" minimum bend radius.

3. To run data cabling from the top cap to other heights in the panel, route wires through the cut-out in the end of the horizontal rail.

4. The horizontal rail cable guard can be snapped in place in the cut-out in the end of the horizontal rail to enforce a 1" minimum bend radius.

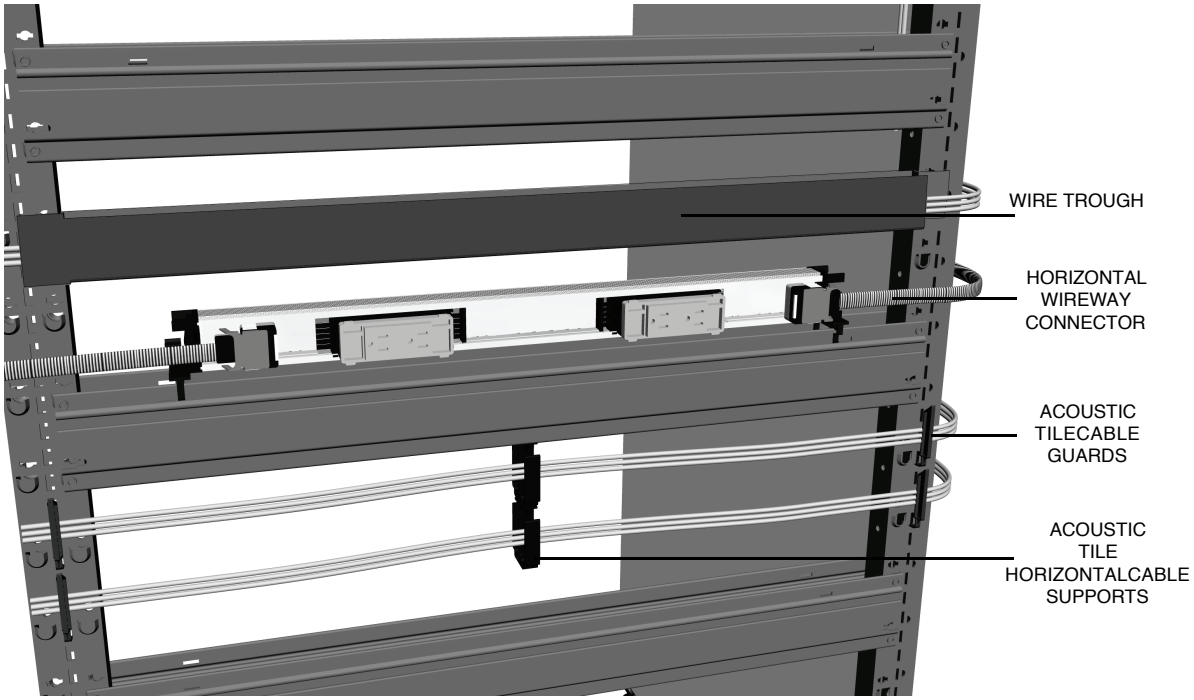

DATA CABLING BEHIND ACOUSTIC TILES

1. Data cabling can be run behind acoustic tiles by using acoustic tile cable guards and horizontal cable supports.

2. It is recommended that wires only be run behind tiles which you will have easy access to after the installation is complete. You will not be able to hang on-module mounted components in front of areas where data cabling is run.

3. Begin by installing cable guards at the height you want to run the data cabling.

4. To install the cable guard, position the protector with hooks down and place the lowest hook in a slot in the vertical that corresponds to an embossed area. Then push the protector down to flex the lower portion of the protector, and pivot the upper hook into place.

5. To support wires in the middle of larger panels, use an acoustic tile horizontal cable support. These supports are turned into a hole located in the bottom center of each horizontal rail. Line up the rectangular projection on the top of the wire support with the rectangular hole in the horizontal. Push the wire support through the horizontal and rotate it one-quarter turn to lock it into place. If support is required for other wires, the wire supports can be ganged by using the rectangular hole in the bottom of the wire support. The attachment is identical to attaching to a horizontal rail.

ACOUSTIC TILECABLEGUARD

ACOUSTIC TILE HORIZONTAL CABLE SUPPORT

ACOUSTIC TILE 90° CABLE GUARD

6. When the necessary wire guards and supports are installed, lay the cabling in place behind the guards and supports.

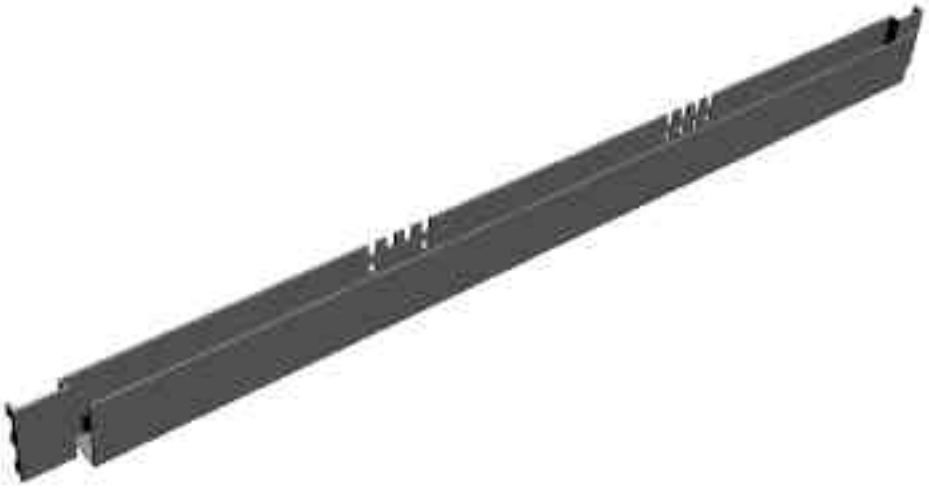

DATA CABLING BEHIND RACEWAY TILES

1. Every raceway tile includes a steel wiring trough to hold data cables and provide steel separation between power and data wiring.

2. The trough hangs in the slots in the vertical posts. The trough should be positioned approximately 1" below the horizontal above it. This allows room for a rigid wireway and data jacks below the trough. Data cabling is simply laid into the trough. Troughs can be used back-to-back.

3. Small notches are provided in the trough to help manage wires between the trough and a data jack below it. The wires can be laid into the notch and then wire-tied in place using the hole under the slot.

DATA CABLING IN THE BASE RACEWAY

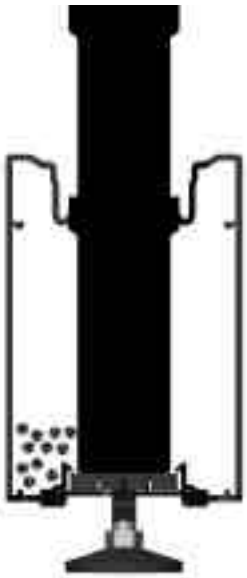

1. There is a space below the rigid wireway in the base where data cabling can be laid. An optional steel septum is available to provide separation between the power and data.

2. To install the septum, position it between the verticals underneath the rigid wireway with the small bent tabs facing downward. The septum is slid up flush underneath the rigid wireway and held in place by the supplied self drilling and tapping screws.

VERTICAL DATA CABLING

1. Data cabling is run vertically through the cut-out in the end of a horizontal rail.

NOTE: **It is recommended that cables be run only on one side of the horizontal, or do not fill either side beyond 50% of the total capacity.**

Storing Extra Data Cables Inside Of Panel

Extra data cabling can be stored inside of panels behind tiles by one of two different methods:

1. Extra cable loops can be stored by setting them into horizontal rails in locations where it does not interfere with other data or electrical cabling.

2. Extra cable loops can also be hung from an unused acoustic tile horizontal cable support.

HANGING ACOUSTIC TILES

- Acoustic tiles have slots in the back to accept the tile hooks.
- With the tile hooks already in place on the frame, hang the tile on the top two hooks.
- While holding the top of the tile against the frame, gently lift up on the bottom of the tile while pushing it in toward the frame. When the bottom of the tile engages the hooks, let the tile slide down into position while continuing to support it against the frame.
- After the tile is hung, pull the tile away from the frame on all corners to ensure that all four hooks are engaged.
- Note that tiles can be rotated and still hung on the panel frame. For example, a 24"x 24" tile can be hung with any edge as the top. When fabrics are directional, you must orient the tile correctly to achieve the correct visual appearance. All tiles have the size marked on the back of the tile. This mark is along the edge that the factory considered the top while it was being upholstered.

HANGING RACEWAY TILES

- Raceway tiles have molded-end pieces to hang onto the tile hooks.
- Raceway tiles 24" and wider come with a knock-out for electrical and/or data. Determine where recepta - cles are needed and trim the fabric around the knock-out area with a utility knife, then knock out the steel plate using diagonal pliers (wire cutters).
- The bezel that snaps into the knock-out covers the cut edge of the fabric. Caution should still be used to avoid excessive fraying of the fabric.
- With the tile hooks already in place on the frame, hang the tile on the top two hooks.
- The lower hooks on raceway tiles are engaged by a snapping action. Apply firm consistent pressure to the lower corners of the raceway tile until the tile snaps into place.

HANGING OPEN TILES AND WINDOW TILES

- Open and window tiles consist of two separate tiles that hang back-to-back. The first tile either supports the glass on a window tile or a thin PVC extrusion for the open tile. The second tile is the same for the window and the open tile and consists of a painted aluminum trim frame.
- Both halves of the open and window tiles are hung like acoustic tiles, except eight hooks are used per side instead of four. The extra hooks are installed just above the lower two hooks and just below the upper two hooks.
- With the tile hooks already in place on the frame, hang the tile on the top four hooks.
- While holding the top of the tile against the frame, gently lift up on the bottom of the tile while pushing it in toward the frame. When the bottom of the tile engages the hooks, let the tile slide down into position while continuing to support it against the frame.
- After the tile is hung, pull the tile away from the frame on the four corners to ensure that all hooks are engaged.
- Install the supplied dislodgement insert into the horizontal above the window using a #3 Phillips head screwdriver. Two inserts are used per window or open tile.
- Note that tiles can be rotated and still hung on the panel frame. For example, a 24"x 24" tile can be hung with any edge as the top.

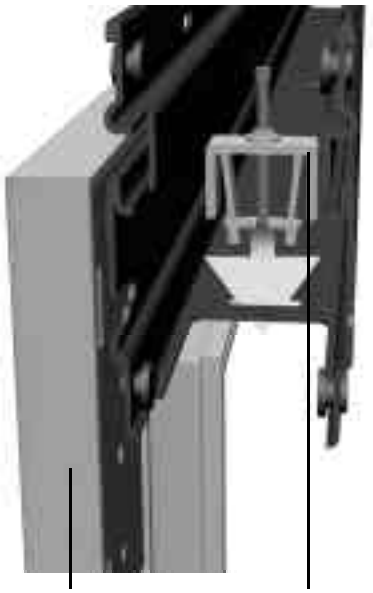

GLASS OR OPEN TILE
(VERTICALPOSTANDOTHER COMPONENTSREMOVEDFOR CLARITY)

DISLODGEMENT INSERT

TURN DISLODGEMENT INSERT SCREW TO EXPAND PRONGS

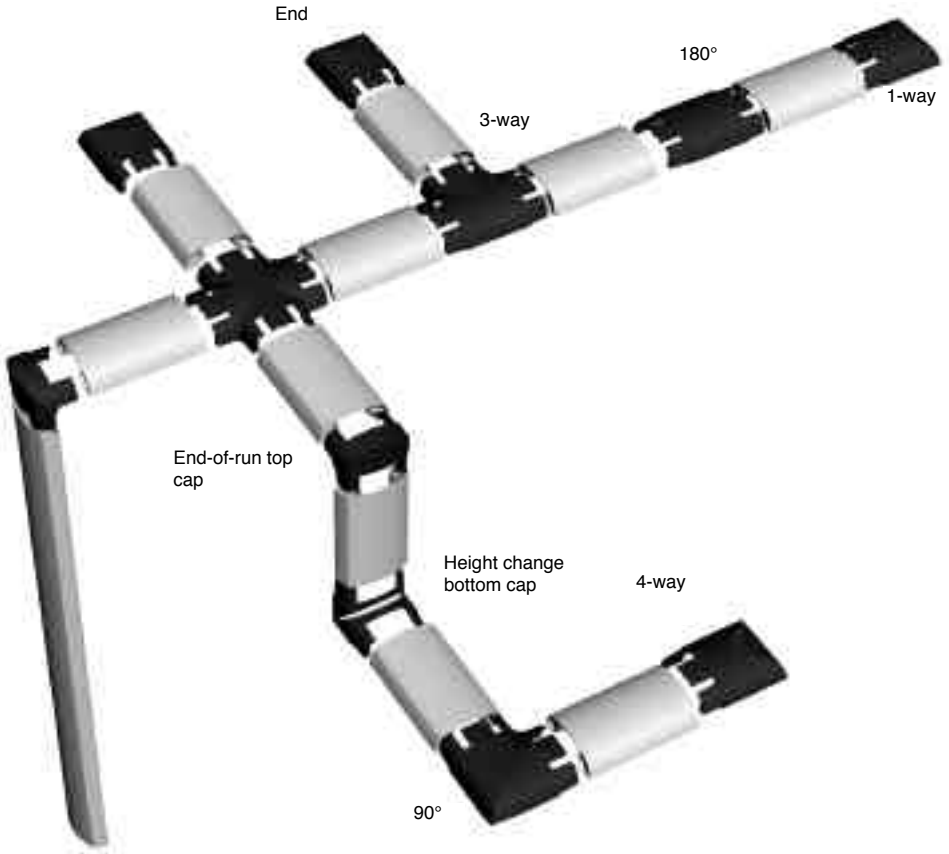

INSTALLING TOP CAPS

- Top caps are the same width as the panel and snap over the top horizontal rail.
- Align the cap over the top horizontal and firmly snap it down into place.
- Hint: To remove top caps, press down in the center of the cap while lifting up on the edge.

INSTALLING END-OF-RUN CAPS

- End-of-run caps are installed over the exposed portion of a full post in an end-of-run condition and are the same height as a panel.
- There is a small notch on one end of the trim, this notch should be at the bottom of the trim.
- Align the cap over the full post and firmly snap it onto the post over the embossed areas.
- End-of-run caps also include an end-of-run top cap which engages the end-of-run trim and an adjacent top cap.

INSTALLING IN-LINE HEIGHT CHANGE TRIM

- In-line height change trim uses the same profile as an end-of-run trim.
- This trim is used to cover the exposed portion of a full post in an in-line height change condition. The lower top cap in the intersection must be trimmed. Turn the trim over; cut to fit (remove approximately 2”).
- Snap the trim into place over the full post.

INSTALLING UNIVERSAL CORNER TRIM

- Three-way and four-way intersections use universal trim to finish the corner . A 90° corner uses two pieces of universal trim and a T-intersection uses one piece. Universal trim can be fabric-wrapped or color matched plastic. The length of the trim is equal to the panel height less 6".
- The universal corner trim snaps into place over the 90° corner block where there are no half posts.
- Position the trim over the corner block and firmly snap it into place over each corner block.

INSTALLING UNIVERSAL HEIGHT CHANGE TRIM

- Height change trim is the same as universal trim with a small notch in the bottom. These trim pieces are used to fill in between panels of two different heights.
- Orient the notch downward and snap the trim over the exposed portions of the 90° corner block.

INSTALLING FOUR-WAY LIGHT BLOCKS

- In a four-way intersection, light blocks need to be installed. These light blocks are black round tubes that slide through the holes in the center of 90° corner blocks.
- If necessary, the tube may be collapsed and bent when there is not enough ceiling clearance to slide the tube into position.

INSTALLING BASE TRIM

- Base trim consists of the main extrusion, base locks, and filler plates (panels 24" and wider only).
- To install the trim, slide it into place under the panel with the base sides lying in the open position.
- When the base cover is centered under the panel around the glides, snap the trim up over the ledge on the glide housings.
- Each base cover lock is then pushed away from the center of the panel until the plunger pops down into the locked position. To ensure the lock is engaged, press inward on the lock. It may be necessary to press down on the plunger to ensure the lock engages.

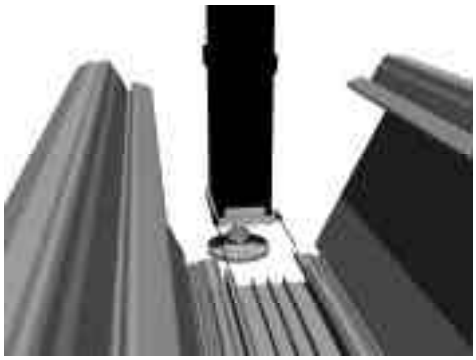

- The base cover filler plates remain in position unless a receptacle is being used in that location. If there is a receptacle, snap the filler plate out from inside of the base cover and snap a bezel in its place from the front of the cover.
- Push the sides of the base cover upward until they engage the lower horizontal.
- Base trim is snapped into place at 90° and T-intersections. The upper tabs engage slots in the half post, and the lower tabs snap over the ledge on the half post glide housing.

TOP INFEED INSTALLATION

1. The top feed consists of four parts: the power pole, the infeed, panel trim, and ceiling trim. The power pole and trim pieces are designed so they can be easily installed after power and data is run into the panel. To install the infeed, run it through the cutouts in the end of the horizontal rail down to the rigid wireway. The infeed must be attached to the rigid wireway at the end with the male connectors. The infeed attaches to the rigid wireway in the same manner as the jumpers.

2. The panel trim consists of two identical pieces that snap together. Orient the two pieces around the infeed and any data cabling above the panel and snap them together. Then lower the combined part onto the panel; the trim should rest on the horizontal rail. NOTE: Top cap needs to be trimmed "to fit" when installing trim.

3. The power pole consists of the main section and the cover. Lay the infeed and any data cabling into sections of the pole and snap the cover closed. Lower the power pole so it sits in the top of the panel trim.

4. The ceiling trim consists of two like parts that snap into each other. Position the two halves near the ceiling and snap them together around the power pole. Slide the trim against the ceiling, trim the ceiling tile as necessary.

BASE INFEED INSTALLATION

1. The base feed is fed through a receptacle opening and can be rotated to a right hand or left hand position.

2. Open the base cover on the panel where the infeed will be. Remove the base filler plate nearest the infeed location. (Note: the infeed must be made at an end of the rigid wireway with the male connectors.) Snap a bezel into the space where the base filler plate was located. Thread the end of the base infeed with the exposed wires out of the upper bezel hole. Install base infeed to rigid wireway.

AT BASE HEIGHT

1. Determine the position you wish to install a receptacle and check to make sure a rigid wireway is mounted behind it.

2. Remove the base filler plate by opening the base and unsnapping it from inside the raceway.

3. Install a bezel from the front of the base. If required, snap a data faceplate (supplied by others) into the unused opening in the bezel. If data face plates are not being used, snap the included bezel filler plate into the unused opening. Note: The filler plate can be snapped in two ways. One position allows data cables to exit, the other position is flush.

4. Snap the appropriate receptacle into the rigid wireway behind the location where the bezel has been installed. The red stripe on the rigid wireway should line up with the molded-in bar on the receptacle.

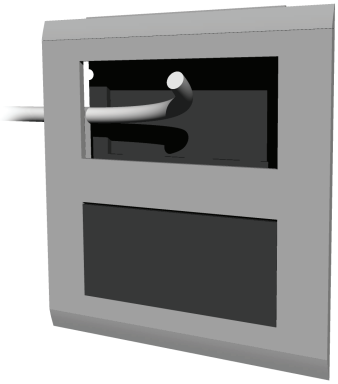

AT OTHER HEIGHTS

1. To install receptacles at other heights, raceway tiles must be present. Raceway tiles are 12" high and have a fabric-wrapped steel face.

2. Determine the location for the receptacle and trim the fabric away as necessary to expose the rectangular cut-out held in place by small steel tabs. HINT: A small wire cutter works well to cut the tabs that hold the rectangle.
   After the fabric has been trimmed, remove the steel rectangle. Snap the bezel into place from the front of the tile. HINT: Trim the fabric from the backside of the raceway tile.

3. Snap the appropriate receptacle into the rigid wireway behind the location where the cut-out was removed. The red stripe on the rigid wireway should line up with the molded-in bar on the receptacle.

4. Hang the raceway tile. Begin by hanging the tile on the top hooks; then allow the tile to rotate down and snap the lower portion of the raceway tile into place by applying firm pressure near the location of the hooks.

ADDING & REMOVING HORIZONTALS

Horizontals can be added and removed without disturbing adjacent verticals or wiring. This allows the user to convert a panel from monolithic to tiled with minimal disruption. This can be useful for adding power at different heights or setting up a panel for use with an off-module overhead.

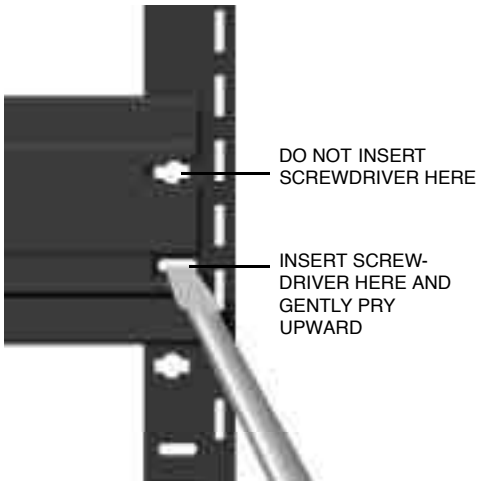

Warning: *Do not remove the top or bottom horizontal of a panel if there are load-bearing components mounted to it or a nearby panel.The panel can only support loads if both the top and bottom horizontal are correctly installed.*

Warning: *Use caution when disassembling both the bottom and the top horizontal of a panel. If there are not returns attached to both sides of the resulting panel run, the panels will not be able to support themselves.*

To remove a horizontal, take off any tile hooks that are locking the horizontal in place and tap the horizontal out with a dead blow mallet. There is not enough clearance to remove the lowest horizontal, so a special slot is included in the vertical which allows a screwdriver to be used to lever the horizontal out. Position the 3/8" flat blade screwdriver at a downward angle and insert it through the off module slot area and into the oval hole. Pry up with the screwdriver to release the horizontal.

Warning: *Do not use the area reserved for the tile hooks to remove horizontals. This will damage the surrounding steel and may make it impossible to properly install tiles in the future.*

Once the horizontal is free, lift the horizontal up and slide the horizontal to one side, rotate the opposite side upward to clear the vertical post, and lift the horizontal free.
Horizontals can be added by positioning the horizontal at any angle and sliding one end around a vertical at the desired height. The horizontal is then rotated downward and centered with the rivets above the embossed area on the post. When all rivets are properly aligned, tap the horizontal into place with a mallet.

Warning: *Be sure all rivets engage in the post properly.*

STACKING VERTICAL POSTS

Stacking vertical posts come in 12", 18", and 24" heights for both the full post and half post. Using stacking posts, you can add height to panels already installed. Please note that there are restrictions to how stacking sections can be used with load-bearing components. Refer to the planning and specification guide for more information.

To install a stacking section, you must first remove the top cap, any wires from the top of the vertical post and the top light block. After the top light block is removed, the stacking splice is positioned above the top of the vertical post and tapped into place. Continue adding stacking sections as required. When installing half post stacking sections, be sure the vertical slots in the stacking post are aligned with the slots in the post beneath it.

After the necessary stacking sections are in place, add the necessary horizontal rails, tile hooks, tiles, and trim to complete the installation.

ADDING INTERSECTIONS

The panel is designed with modular trim at the intersections. To add another panel to an intersection, simply remove the trim that is covering the side you wish to add a panel to, and bolt a new half post into the 90° connector block. Continue to install the additional panels as described in the previous sections.

Unloaded Panel Runs

For unloaded panel runs, the maximum length of a run is 12' and the return panels must be at least 48" wide and within 18" in height of the main run of panels. Panels may be stacked to a maximum height of 12' and must remain below the height of the ceiling, but the returns must remain within 18" in height of the main run. Any combination of glass, open, or acoustic panels is allowed.

Stacking Section Guidelines

Use the following specifications when applying stackable sections. Stackable sections must always remain below the ceiling. Multiple stacking sections must begin with a standard non-stacked vertical post. To stack on top of a fully assembled panel, at least 7" of clearance should be left between the top of the panel and the ceiling. If less clearance is available, the panel frame must be disassembled before adding or removing stacking sections.

Load Bearing Applications

Stacking sections are designed to be load bearing, however, only one stacking section is allowed at or below the height of the load bearing components. Above the height of load bearing components, any number of stacking sections can be used. Unloaded return panels can utilize any number of stacking sections.

Non-Load Bearing Applications

When panels will not be bearing loads, any number of stacking sections may be used, however, you still must keep return panels within 18" in height from the main run for stability reasons. Panels can be stacked to a maximum height of 12' and must be below the ceiling.

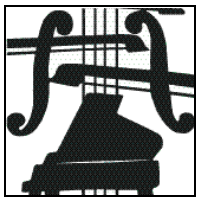

U.S. Department of Justice
UNICOR
Federal Prison Industries, Inc.

CATPIEP100B

www.unicor.gov
(800) 827-3168