Unicor Assembly Jig Sizing Instructions

Sizing To Be Performed Prior to Bed Assembly.

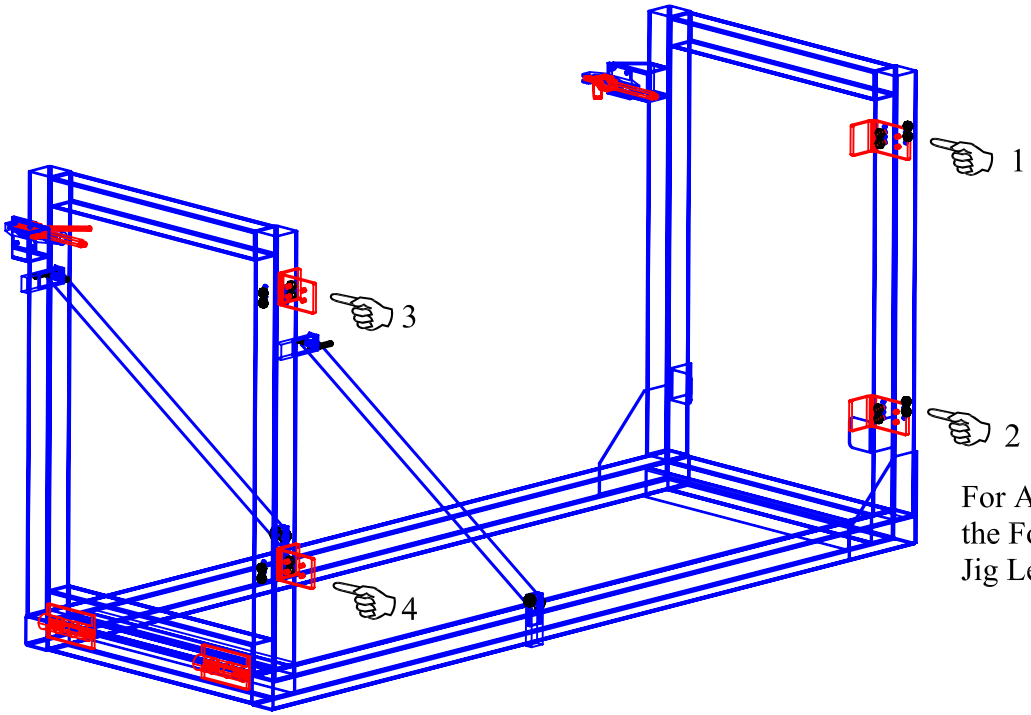

For Assembly of 27" Wide Beds, Bolt the Four (4) Sizing Stops to the Inside of Jig Leg as Shown. (See Note)

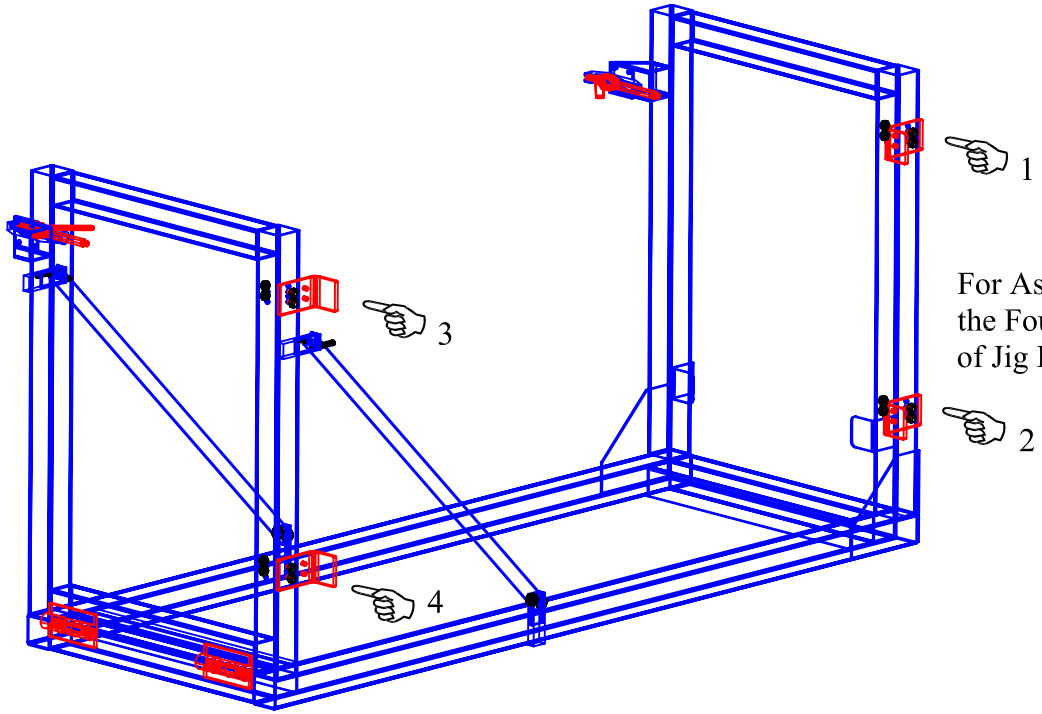

For Assembly of 30" Wide Beds, Bolt the Four (4) Sizing Stops to the Outside of Jig Leg as Shown. (See Note)

Note:
Be Sure that the Code stamped on Sizing Stops, corresponds with the Code stamped on Jig Legs. (A1 to A1, A2 to A2 etc.)

ENGINEERING DEPARTMENT

UNICOR METALS DIVISION
F.C.I. EL RENO, OKLAHOMA

UWP\BED\DKD JIG\DBL-JIG02.DWG