Dbl Knock-Down Seg Bed Assembly Instructions Using Unicor Assembly Jig

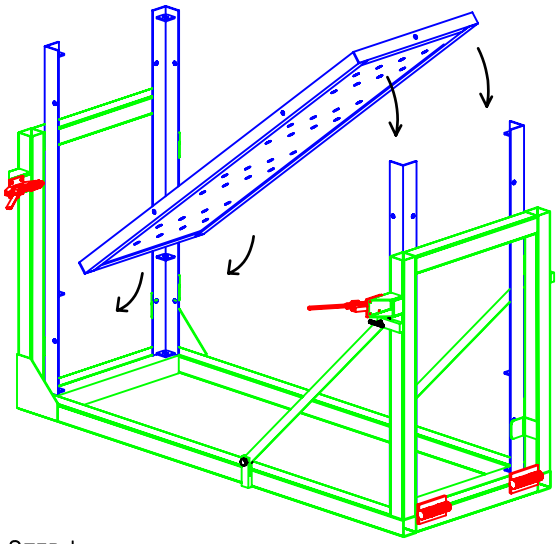

Step 1:
With the Sizing Stops in the correct position for the size bed to be assembled, the hinged end of Assembly Jig in the Up Position and the Securing Clamps in the open position, have two (2) assemblymen hold the four (4) Bed Legs in position, while two (2) other assemblymen position the Bottom Bed Pan on the lower positioning gussets.

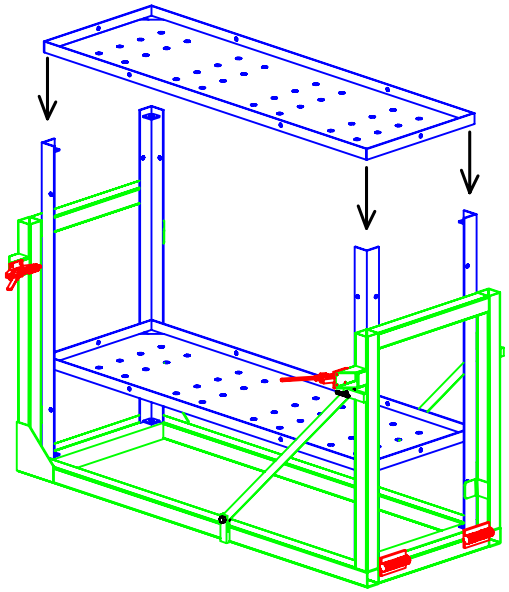

Step 2:
With the Bottom Bed Pan in position on the Lower Positioning Gussets, and the Bed Legs still being held in position by the two (2) assemblymen, lower the Top Bed Pan onto the Upper Positioning Gussets. This accomplished, close the Securing Clamps to hold the Bed in position for welding.

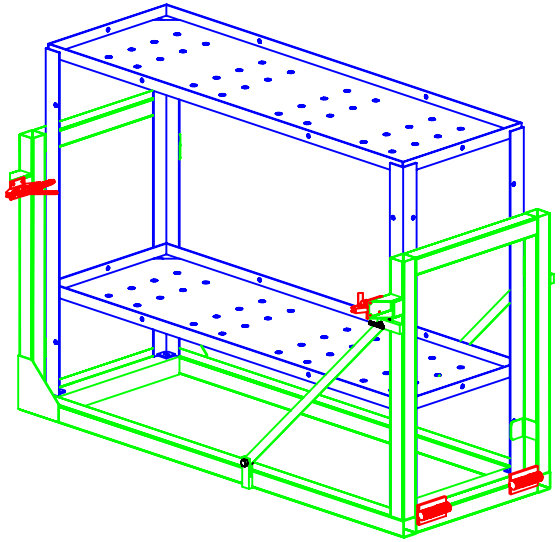

Step 3:
After inspecting the Bed and insuring the component parts are assembled properly, weld in accordance with provided Welding Instructions.

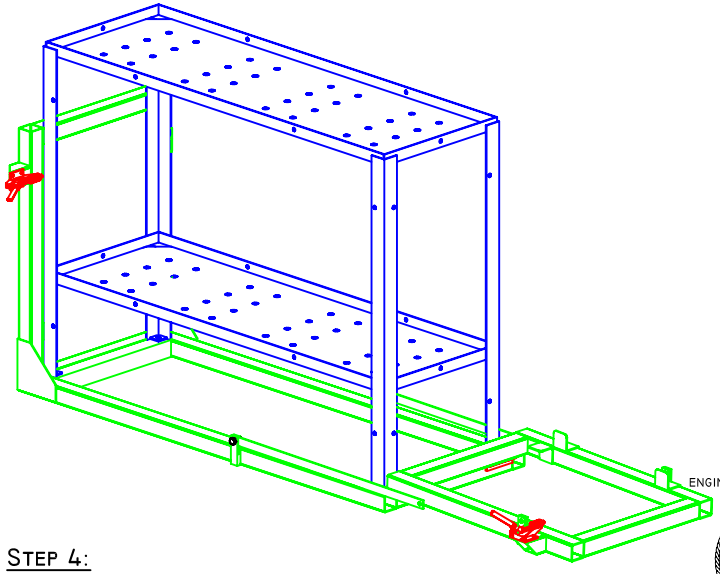

Step 4:
With Welding accomplished, open clamps, pull the hinged end holding pins, and lower the hinged end of Assembly Jig. Remove completed Bed.

ENGINEERING DEPARTMENT

UNICOR METALS DIVISION
F.C.I. EL RENO, OKLAHOMA

UWP\BED\DKD JIG\DBL-JIG01.DWG